Journal of Engineering Sciences

Vol 13, Issue 04, APRIL /2022
ISSN NO:0377-9254

# Railway track fault detection enhancement using Arduino and IoT

**P Manmohan Shashank Varma [1],P.Sowjanya [2],**

1. Post Graduate scholor, Malla Reddy Engineering College, Kompally, Ranga Reddy, Telangana.
2. Associate Professor, Department of Electronics and Communication Engineering, Malla Reddy Engineering College, Hyderabad-500100, India

*Abstract*— ***Train accidents are very common throughout the globe, each year many train accidents are reported worldwide due to railway defects. Thus, there will be losses of human lives and injury. The system will inform the maintenance team via GSM or SMS so that the repairing job could done faster. The Railroad Hand-Pump Car is a simple track maintenance vehicle made up of a platform built on 4 flanged railroad wheels and propelled by hand power. Rods, gears and cranks are utilized to enable the car to travel along the rails. These unique vehicles were created in the late 1850's and early 1860's.***

***Keywords— IoT, Arduino, Sensors, Railway, GSM.***

## I. INTRODUCTION

Reinach and Gertler [1,2] (2002) state that the train accident and incident rate in railway yards far exceeds the rates across the entire railroad industry. The need for better rail inspections came after a derailment at Manchester, New York, in 1911. Train accidents include collisions and derailments that involve the operation of on-track equipment and those that satisfy the certain reporting thresholds set by the Federal Railroad Administration, (FRA, 2003). A railway crack detection system uses the sensors to detect defects and data log when a crack is detected. The prompt detection of the faults in rails that concede possibility bring about crack or rather a break now plays a vital part in the maintenance of rails global. With the arrival of effective digital signal processors and image processing techniques have been look to plan resolution to the problem of railway crack detection. In spite of the fact that these methods provides good certainty, it uses techniques like image segmentation, morphology and edge discovery, all of that take a lot of processing capacity and an extreme amount of time causing the process to slow down and thereby inconvenient. The understanding of these systems happen invariably thereby improving and making it reliable for movement of rail traffic by non-destructive inspection methods which are used to detect damages on rails [3].

The rest of the paper is organized as follows. Section 2 presents the background and motivation for our research. In section 3 we are presenting our proposed approach. Section 4 presents the software description, we conclude our paper in section 5 and provide with future scope in section 6.

## II. BACKGROUND AND MOTIVATION

**Arduino:** Arduino board designs use a variety of microprocessors and controllers (See Fig.1). The boards are equipped with sets of digital and analog input/output (I/O) pins that may be interfaced to various expansion boards (shields) and other circuits. The boards feature serial communications interfaces, including Universal Serial Bus (USB) on some models, which are also used for loading programs from personal computers.

**Global System for Mobile Communication (GSM):** GSM, which stands for Global System for Mobile communications, reigns (important) as the world's most widely used cell phone technology. Cell phones use a cell phone service carrier's GSM network by searching for cell phone towers in the nearby area. Global system for mobile communication (GSM) is a globally accepted standard for digital cellular communication.

**GPS:** The Global Positioning System (GPS) is the only fully functional Global Navigation Satellite System (GNSS). The GPS uses a constellation of between 24 and 32 Medium Earth Orbit satellites that transmit precise microwave signals, which enable GPS receivers to determine their location, speed. GPS was developed by the United States Department of Defense. Its official name is NAVSTAR-GPS. Although NAVSTAR-GPS is not an acronym, a few

acronyms have been created for it. The GPS satellite constellation is managed by the United States Air Force 50th Space Wing.

**Buzzer:** A buzzer or beeper is a signaling device, usually electronic, typically used in automobiles, household appliances such as a microwave oven, or game shows.

**Infrared Technology:** Technically known as "infrared radiation", infrared light is part of the electromagnetic spectrum located just below the red portion of normal visible light – the opposite end to ultraviolet. Although invisible, infrared follows the same principles as regular light and can be reflected or pass through transparent objects, such as glass. [4]

**Wi-Fi module ESP8266 (Node MCU):** Node MCU is an open source IoT platform. It includes firmware which runs on the ESP8266 Wi-Fi SoC from express if Systems, and hardware which is based on the ESP12 module.

**Internet of Things (IOT):** The Internet of things (IoT) is the extension of Internet connectivity into physical devices and everyday objects. Embedded with electronics, Internet connectivity, and other forms of hardware (such as sensors), these devices can communicate and interact with others over the Internet, and they can be remotely monitored and controlled. [5,6]

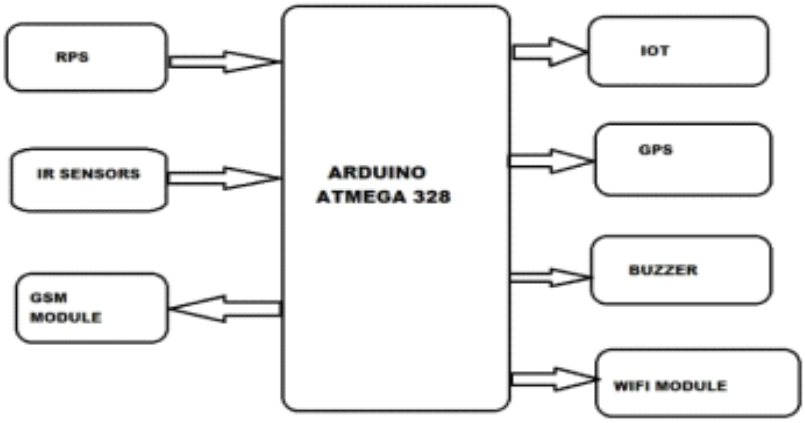


Fig 1: Block Diagram

## III. PRACTICAL IMPLEMENTATION

### A. Connecting Arduino with Wi-Fi Module (Node MCU):

Connect Rx of ESP12 -> Tx of Arduino.
Connect Tx of ESP12 -> Rx of Arduino.
There is one analog pin available in Node MCU (ESP12), we could use that pin but ESP series can take upto 3.3 volts on their pins. As we are using current sensor which can give upto 5 Volts so, it can damage our Wi-Fi module that's why we are not using standalone Node MCU. To make output of current sensor 3.3V instead of 5V, we cannot use voltage divider circuit between Current sensor and analog pin of Node MCU because as we discussed above about the current sensor that at 2.5Volts output, current is 0Amp (See Fig. 2).

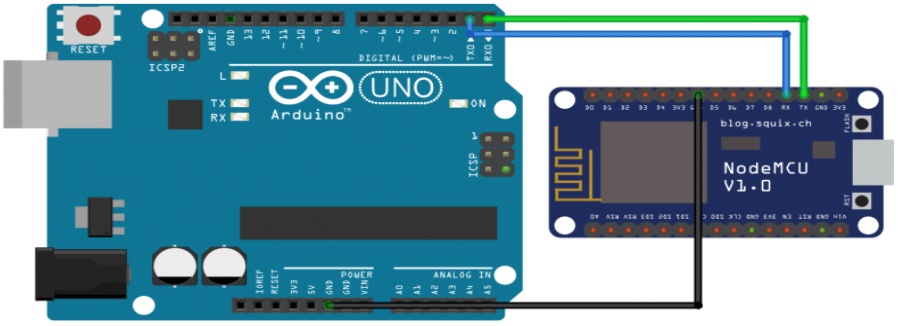


Fig 2: Arduino with Wifi module (NODE MCU)

**B. Connecting GPS with Arduino :** To connect your GPS module to Arduino, use a +5V from the power side of the Arduino and any ground pin. Any two pins will work for the serial communication, but on this tutorial we will use 3 and 4:

- Connect Arduino pin 3 to the RX pin of the GPS Module.
- Connect Arduino pin 4 to the TX pin of the GPS Module.

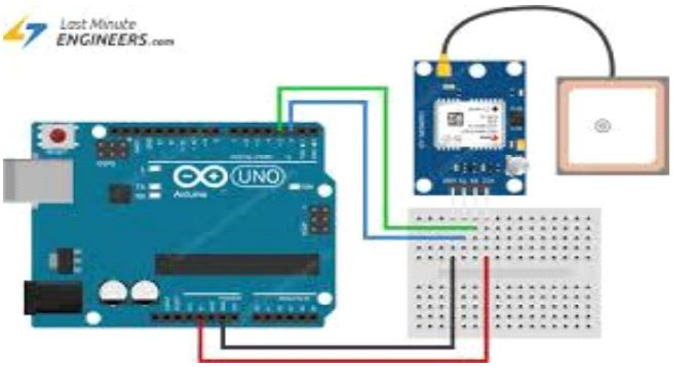


Fig 2: Adriano with GPS Module

**C. Connecting IR Sensors with Arduino:** First, connect the four LEDs to the Arduino. Connect the positives of the four LEDs to the pins 7, 6, 5, and 4. Connect the negative of the four LEDs to GND on the Arduino through the 220 ohm resistors (See Fig. 3).

- Connect the negative wire on the IR sensor to GND on the Arduino.
- Connect the middle of the IR sensor which is the VCC to 5V on the Arduino
- Connect the signal pin on the IR sensor to pin 8 on the Arduino

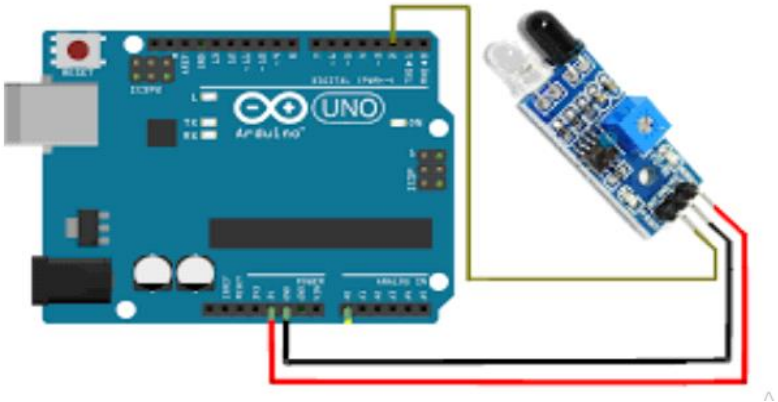


Fig 3: Arduino with IR sensors

There is a built-in LED connected to the digital pin number 13 of the arduino pro-mini board and this particular code is for blinking that led with a delay.
Pin Mode (5, OUTPUT);
To make pin number 6 as input pin Mode(6, INPUT);
In this particular example the pin13 is already defined as led using the statement
int led = 13
and hence came the following statement
pin Mode(led, OUTPUT);
which can make the 13th pin of the arduino board as output.
The digital Write() is another function which can be used to write a digital value (logic 0 or logic high) to a particular pin which has already been made as output using the pin Mode() function. For example to make the pin number 5 as logic high
Digital Write (5, HIGH);
And to make the same pin as logic low
Digital Write (5, LOW);
The function delay () is a very useful function for almost all the projects and it can generate a delay in milliseconds between the code steps.
For example to generate a delay of 5 seconds,
delay (5000);

## V. RESULT

Figure 4: Hardware setup of Fault Detection

## VI. CONCLUSION

As we know that there is a large number of accident occurring due to the faults in railway tracks, so this project will be helpful to prevent any irregularities in the railway. Monitoring and maintenance by human is very difficult and takes more time. Initially IR sensors were used but since they are less efficient compared to UV-sensors, they are replaced and are being used for slabs on the track and not for the crack detection. To avoid delays our proposed system will immediately notify the current train.

## VII. FUTURE SCOPE

In future, we will also use the CCTV systems with IP based camera for monitoring the video visuals captured from the track. It will also increase the reliability for both rails and passengers.

## REFERENCES

[ 1 ] https://m.timesofindia.com/india/586-train-accidents-in-last-5-years-53-due-to derailments/amp_articleshow/60141578.cms
[ 2 ] S. J. Reinach and J. B. Gertler, "Railroad Yard Safety: Perspectives from Labor and Management", 2002.
[ 3 ] D. Bhat, N. Khatawkar, N. Kadli and D. Veergoudar, "An Inspection System for Detection of Cracks on the Railway Track using a Mobile Robot", 2015.
[ 4 ] B. Siva Ram Krishna, D. Seshendia, G. Govinda Raja, T. Sudharshan and K. Srikanth, "Railway Track Fault Detection System By Using IR Sensors And Blutooth Technology", *Asian Journal of Applied Science and Technology (AJAST)*, vol. 1, no. 6, pp. 82-84, 2017.
[ 5 ] P. Navaraj, "Crack Detection System for Railway Track By Using Ultrasonic And Pir Sensor", *International Journal of Advanced Information and Communication Technology*, vol. 1, no. 1, pp. 126-130, 2014.
[ 6 ] D. Narendhar Singh and D. Naresh, "Railway Track Crack Detection And Data Analysis", *International Journal Of Creative Research Thoughts*, vol. 5, no. 4, pp. 1859-1863, 2017