Journal of Engineering Sciences
Vol 13, Issue 05, May /2022
ISSN NO:0377-9254

INTERNET OF THINGS GAS LEAKAGE IDENTIFICATION SYSTEM USING BLYNK APP

A.J.PRASANTH KUMAR[1], S.S.ARCHANA BHARGAVI[2], K.S.K.NIKITHA[3], V.DURGA RAO[4], G.SUMANTH[5]

[12345]UG Students, Dept. of EEE, PRAGATIENGINEERINGCOLLEGE

ABSTRACT

In the past few years there is a rise in home automation systems which benefits the need for people using methods of Internet of Things (IoT). The main idea of this paper is to carry out the literature review on IoT based gas detection techniques and to ensure the safety of people and surroundings. By presenting a simple yet reliable system, gas leakage detection system using MQ5 gas sensor and Arduino based Node-MCU controller is incorporated with cloud storage for data collection and also used for storing and analyzing data. Gas leaked is converted from Parts Per Million (PPM) to volts through the Arduino IDE and results in notifying the user when the threshold limit is crossed. The user is alerted via an application for quick notification through the internet and also through a buzzer /LED for physical notification.

INTRODUCTION

LPG is that the abbreviation or short kind for liquefied oil gas. Like all fossil fuels, it's a non-renewable supply of energy. It is extracted from fossil oil and gas. The most compositions of LPG square measure Hydrocarbons containing three or four carbon atoms. The conventional parts of LPG so, square measure gas (ClHa) and alkane (CaHro). Tiny concentrations of alternative hydrocarbons may additionally be gift betting on the supply of the LPG and the way it's been created, parts apart from hydrocarbons may additionally be gift. LPG is extremely combustible and should thus be hold on off from sources of ignition and during a well-ventilated space, in order that any run will disperse safely. LPG vapors is heavier than air thus care ought to be taken throughout storage in order that any run won't sink to the bottom and find accumulated in a district that is low lying and tough to disperse. LPG gas is largely gas and alkane and it's scentless in its state of nature. The smell that we tend to notice once there's a run is really of a wholly totally different agent, referred to as alkyl radical Mercaptan. This substance is

Journal of Engineering Sciences

additional to the gas once it leaves the most storage terminals.

The prime aim of this project is to detect Gas leakage in home, hotels, schools and other domestic areas, and gives alert message to the surrounding people. Nowadays Gas sensors are being used globally in the field like safety, health, instrumentation etc. This project is an implementation of the same using MQ-5 gas sensor and DHT11 temperature sensor. The MQ5 sensor is commonly used for detecting gas leakage for various applications and the DHTIL is used for measuring the humidity and temperature of surrounding area. The device also keeps displaying the leakage amount and humidity & temperature on the website. The MQ6 gas sensor detects the concentration of gas in ppm and outputs analog value which can be converted to a digital signal using inbuilt Analog to Digital Convertor of Arduino. The paper allows the user to set the low, medium and dangerous level for leakage based on the same digital measure. The intensity values are compared with two predetermined thresholds and based on that, it classifies it into three different classes of concentration of leakage.

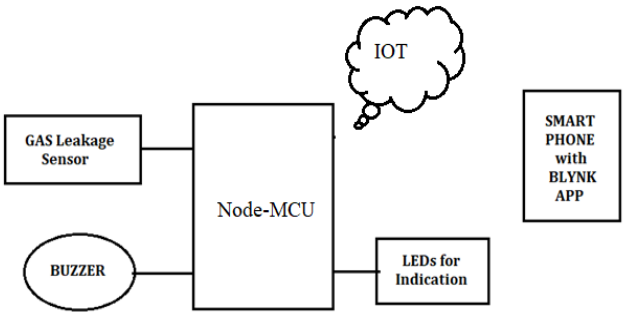

LITERATURESURVEY

Abhijeethrathiet.al (2013); introduced a golem based on automatic gas detection and indication golem. They planned image depicts a mini mobile golem that is capable to observe gas leak in unsafe places. Whenever there's an occasion of gas leak during a specific place the golem instantly scan and sends the information to golem mobile through wireless communication like Bluetooth. We have a tendency to develop a golem application for golem primarily based good phones which may receive knowledge from golem directly through Bluetooth. The applying warns with a sign whenever there's an occasion of gas leak and that we can even management the movements via Bluetooth by exploitation text commands yet as voice commands.

Vasudev Yadav et.al (2016); in this paper MQ-9 computer circuit is used associated with embedded system. Such systems sometimes haven't any keyboard, screen, disks, printers, or different recognizable

Journal of Engineering Sciences

I/O devices of a private pc, and will lack human interaction device.

Pal-Stefan et.al (2008); Introduced few old and new technologies to detect the gas. In this the proposed techniques are nontechnical, acoustic methods, optical methods and active methods.

The reason for such explosions is due to substandard cylinders, old valves, no regular checking of gas cylinders, worn out regulators and a lack of awareness of handling gas cylinders. Therefore, the gas leakage should be detected and controlled to protect people from danger. An odorant such as ethane thiol is added to LPG, so that leaks can be detected easily by most people. However, some people who have a reduced sense of smell may not be able to rely upon this inherent safety mechanism. A gas leakage detector becomes vital and helps to protect people from the dangers of gas leakage. A number of research papers have been published on gas leakage detection techniques [1–8]. K. Padmapriya et al. proposed the design of a wireless LPG monitoring system. In this paper, Eng. Proc. 2020, 2, 28 2 of 6 the user is alerted about the gas leakage through SMS and the power supply is turned off [6]. Meenakshi Vidya et al. proposed the leakage detection and real time gas monitoring system. In this system, the gas leakage is detected and controlled by means of an exhaust fan. The level of LPG in cylinder is also continuously monitored [7]. Selvapriya et al. proposed the system in which the leakage is detected by the gas sensor and produce the results in the audio and visual forms. It provides a design approach on software as well as hardware [8]. In the existing method, different gas sensing technology is used.

PROBLEM STATEMENT AND SOLVING

During past decades, as result of civilization and urbanization there is a huge growth in Polluting industries, open burning of refuse and leaves, massive quantities of construction waste, substantial loss of forests and vehicles (particularly diesel-driven cars) on roads that give rise to health endangering pollution. Therefore, it is necessary to regularly monitor and report the hazardous impacts from air pollution. To monitor the quality of air, a new framework is proposed that monitors the parameters of the environment around us such as CO2, CO, presence of smoke, alcohol, LPG, temperature and humidity with the help of GSM, Bluetooth and WSN.

Journal of Engineering Sciences

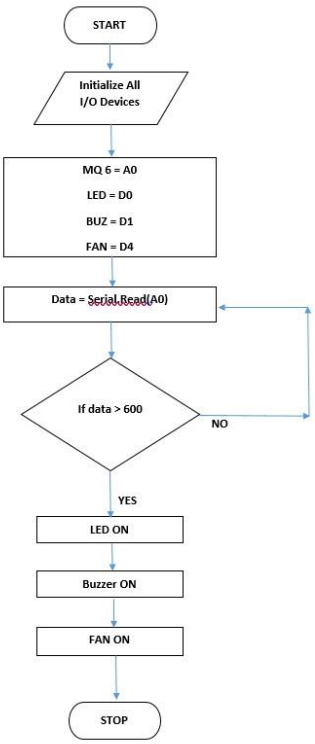

RESULTS

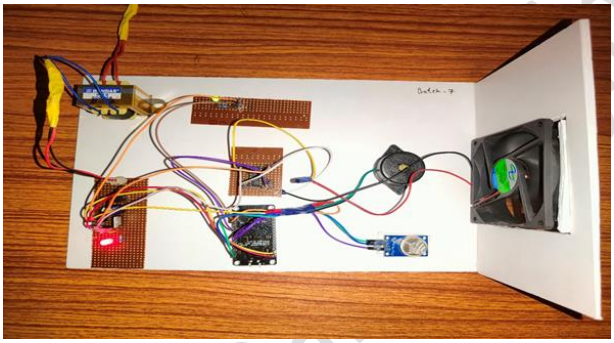

This kit explains about the "Gas Leakage Detection System using IoT and integratrd notifications" and whenever the ppm value is above the threshold value the buzzer, LED and fan starts working.

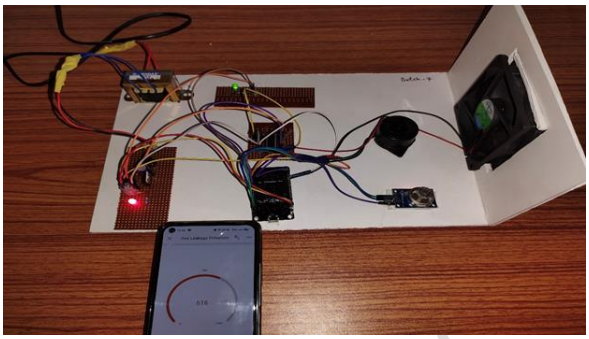

If the detected value of ppm is more than 600 ppm then the buzzer , LED and dc fan starts working that is the buzzer starts to make sound the LED will be ON and the fan starts rotating and a message called "SMOKE DETECTED" is displayed on the blynk app.

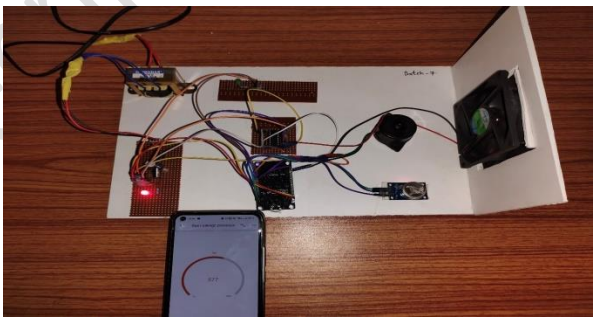

If the detected ppm value is less than 600 ppm the buzzer , LED and fan stops working and a message called "NO SMOKE DETECTED" is displayed on the blynk app.

CONCLUSION

Gas escape could result in severe accidents which ends in material losses and human injuries.

Gas escape happens chiefly because of poor maintenance of apparatus and inadequate awareness of the individuals.

Journal of Engineering Sciences

Thus LPG escape detection are useful to stop accidents and to avoid wasting human lives. This paper conferred LPG escape detection and alert system.

This technique triggers buzzer and displays the severity of the escape to alert individuals once LPG escape is detected.

This technique is incredibly straightforward nevertheless reliable.

FUTURE SCOPE

It leaves United States with the additional scope of improvement. Battery utilized in this technique is of 5V that isn't that a lot of tolerable, in future improvement, we are able to use a much bigger, reversible one, which may sustain the gas detection module for an extended amount of your time, with alert whenever battery runs out In additional modification, additionally to solely escape detection we are able to resolve the concentration of the gas too. This Project includes a smart viability to be launched in industrial market, tiny scale industries having multiple cylinders hold on. With additional improvement in style the system will be created additional handy and price effective for the users.

REFERENCES

1.Vaishnavi et.al (2014) “Intelligent LPG Leakage Detection”, International Journal Of Scientific & Engineering Research, Vol. 5, Issue 11, 2014.

2.http://Centrallibrary.Cit.Ac.In/Dir/Project%20Report/2018/Diploma/ETE/Detection%20of%20lpg%20leakage%20using%20arduino.Pdf

3.https://Www.Slideshare.Net/Abhijeetrathi/Lpg-Detection-Mechatronic-System

4.https://Www.Scribd.Com/Document/436529826/Detection-Of-Lpg-Leakage-Using-Arduino Pdf

5.http://Www.Aut.Upt.Ro/~Palstefan.Murvay/Papers/Survey_Gas_Leak_Detection_Localization_Techniques.

Journal of Engineering Sciences