Journal of Engineering Sciences

Vol 13, Issue 05, MAY/2022

ISSN NO:0377-9254

Development of Monitoring System for Car Parking

Authors

[1]Aarish Pathan, [2]Aishwarya Lakhe, [3]Owais Pathan, [4]Sahil A. Sheikh,

[5]Sweeti Gonde, [6]Yash Deshbhratar, [7]Dr. Ruhi Uzma Sheikh, [8]Prof. Ishraque Ahmed

[1] aarishkhan888@gmail.com,

Student of Electrical Department, Anjuman College of Engineering and Technology, Nagpur

[2] aishwaryalakhe11@gmail.com,

Student of Electrical Department, Anjuman College of Engineering and Technology, Nagpur

[3] owaisp39@gmail.com,

Student of Electrical Department, Anjuman College of Engineering and Technology, Nagpur

[5] sahil_asheikh@rediffmail.com,

Student of Electrical Department, Anjuman College of Engineering and Technology, Nagpur

[5] sweetigonde9@gmail.com,

Student of Electrical Department, Anjuman College of Engineering and Technology, Nagpur

[6] yashdeshbhratar1510@gmail.com,

Student of Electrical Department, Anjuman College of Engineering and Technology, Nagpur

[7] rusheikh@anjumanengg.edu.in

Assistant Professor of Electrical Dept, Anjuman College of Engineering and Technology, Nagpur

[8] ishaqueahmed@anjumanengg.edu.in

Assistant Professor of Electrical Dept, Anjuman College of Engineering and Technology, Nagpur

Abstract:

The increasing number of vehicles on the road along with the mismanagement of available parking spaces leads to parking-related problems as well as increased traffic congestion in urban areas. Therefore, it might be good to develop a parking system based on IoT to automated smart parking management system that will help us and the drivers to find out the suitable parking space for his/her vehicle very quickly. Although ample research works on the development of smart parking systems exist in the literature, most of them have not addressed the problem of real-time detection of improper parking and automatic collection of parking charges. In this paper, a prototype of an internet-of-thing-based E-parking system is proposed. The proposed E-

parking system uses an integrated component called a parking meter to address the above-mentioned issues as well as to provide smart parking management throughout the city.

Keywords IoT, Parking app, Ultrasonic sensors

I. Introduction

There is a number of incidences today where peoples park their cars in places where NO PARKING is allowed and also where there is no space available to park the space, this leads us to a major problem. These days, parking not only in cities but also in towns is one of the most difficult conundrums for people. People waste a lot of their time finding the right parking slots, as a result, many park their vehicles in congested areas and places where parking is prohibited. This leads to a lot of confusion, especially during the rush hours when there is a lot of traffic wasting lots and lots of time. We are developing to deal with this problem in an efficient way as this project allows us to check the status of the parking slots this the application. The person who needs to check a slot first has to register himself on the application after which he gets to know the available or vacant parking spots nearest to the place he wishes to visit. Also, this helps to improve the day-to-day usage of parking spaces and saves time. This sheds the light on the way in which this difficult problem might be solved in the future. The prototype basically looks for the available parking slots and helps the driver or the person to check them. After the driver parks his vehicle, a message is sent to the cloud server using the ESP-12 chip that this slot is reserved as '1', and that is updated on the android app which is connected with the cloud server which is connected to the ESP-12 chip module.

II. Literature Review

Mainly automation techniques have been reviewed in order to check the recent works regarding system check techniques that can help to monitor the status through the sensors or to ensure some repetitive tasks that can be replaced by automation. IoT with Android application and Cloud Computing have been popularly used as the major technologies for this purpose.

A. IoT-based parking management system.

In this system, IoT basically gets the status of the parking slots and updates them on the cloud server with the ESP-12 chip. ESP-12 chip is used as a wireless connecting tool to connect the microcontroller with other technology like cloud technology to send the data on the server that were obtained by the ultrasonic sensors. [1]

B. Android Application.

This application is used to retrieve the status of the parking slots from the cloud server which is regularly updated via the IoT module using ultrasonic sensors.

C. Display Indication Board.

The Display Indication board is used to display the status on the site if the parking to check the status of the parking so that the drivers can park their cars according to the status that was shown on the display indication board.

III. Methodology

In the proposed work, IoT is used as a core technology to implement the design. A system has been designed to check whether the car is parked or not. The control of this work is based on IoT, which Shows whether the parking space

is vacant or engaged. In the design, two Ultrasonic sensors are connected to one wifi module. These two signals provide the parking data to the user on the car parking app. Now, this application or system is very reliable to check the parking slots or spades and also good enough to rely on as this system is based on real-time status that was provided via IoT and cloud-based services and congestion saving both time and money. Using this methodology and strategy we can help alleviate the stress and confusion that a driver has to face in order to do an easy enough task such as parking his vehicle.

The primary work of this project is to provide the parking status to the drivers so that they don't have to waste their time searching for parking and burn their brains. So, for that, we have designed a project that helps drivers to get status about the parking place in an apartment or building where our system is installed. The basic working of this project is based on IoT i.e., the Internet of Things which is linked with an Android application that we personally designed for this project. We installed an IoT system in the basement of the Anjuman College of Engineering and Technology, Nagpur for testing and also developed an Android application so that we can check the status of the parking slot through an Android application. In an IoT system, we have used an Arduino microcontroller to control all the signals of the system and also to control the other equipment of the system. To sense the object, we have used Ultra Sonic Sensors which is having a range of 1 meter so we can detect the object in a range of 1 meter. For example, if a car is parked then the Ultra sensor will detect the car and send the status as "parked" in the cloud via wi-fi module, and then from the cloud that status will fetch in an Android application in an application that status will show as "parked or not-parked" with color separation.

Block Diagram and Working:

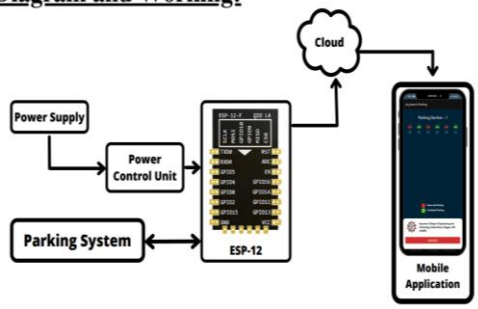

Fig Flowchart.

IV. Technology used

1. **IoT (Internet of Things):** It is the most widely used technology owing to the presence of internet services and its coverage all over the country. As internet usage has increased and also the number of users has increased it makes it a feasible technology for users.

2. **Arduino IDE:** The programming of NodeMcu is generally done on Arduino IDE which is open source software compatible with multiple controller boards.

3. **Android Studio:** It is an IDE (Integrated Development Environment) in which we can design and develop Android Applications based on IntelliJ IDEA.

4. **Cloud Server:** The cloud server is nothing but the server that is used to store the data that may be raw or structured data.

V. Component Details

1. ESP12 Chip: The ESP-12 module is one of the most complete of the ESP family as it allows you to use the biggest amount of pins of all of

them. The system is equipped with ESP8266 manifested leading features: energy-saving VoIP quickly switches between the sleep/wake patterns, with low-power operation adaptive radio bias, and front-end signal processing functions.

2. Ultrasonic Sensor: This economical sensor provides 2cm to 400cm of non-contact measurement functionality with a ranging accuracy that can reach up to 3mm. Each HC-SR04 module includes an ultrasonic transmitter, a receiver, and a control circuit. There are only four pins that you need to worry about on the HC-SR04: VCC (Power), Trig (Trigger), Echo (Receive), and GND (Ground). You will find this sensor very easy to install.

3. 7805 IC: The 7805 Voltage Regulator IC is a commonly used voltage regulator that finds its application in most electronics projects. It provides a constant +5V output voltage for a variable input voltage supply.

4. LEDs: We have used 2 LEDs Green LED indicates that the space is available and Red LED indicates space is not available.

VI. ACET Parking App Design

ACET Parking app is a third-party app development service that works with open source platforms and provides compatibility with IoT-based projects. The following figure shows the basic design of the project app functions.

Steps for Parking app

i. *Download the 'ACET Parking App'*
ii. *Register User*
iii. *Enter the login credentials*
iv. *According to the labels, programming in ESP12 is done to check the functionality.*
v. *After credentials are authorized, the ACET parking app can now connect and work in synchronization with the hardware module of the project.*

VII. Schematic Circuit Diagram of Project:

The components are connected according to the diagram as shown below which will help to highlight the pins used and the functionality of the overall project.

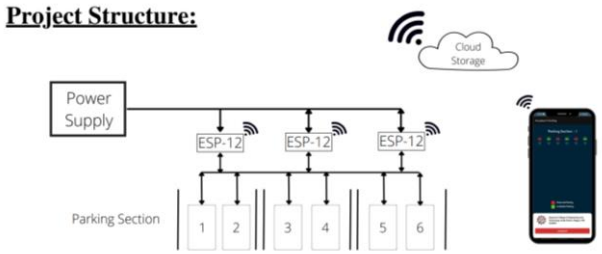

Fig (v) Schematic Diagram

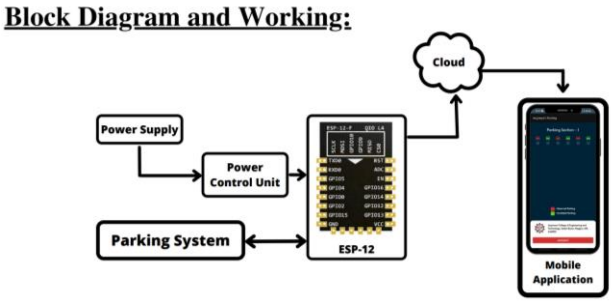

Fig (vi) Single Unit Diagram Diagram

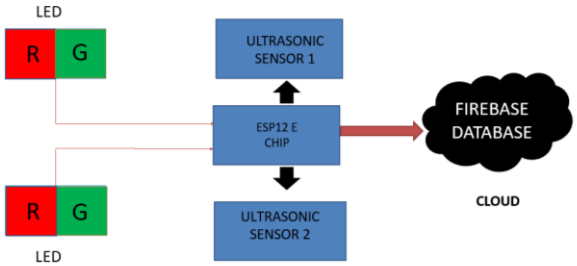

Fir (vii) Single Module Diagram.

VIII. Result and Conclusion

In this, we have proposed the implementation of IoT based ACET basement Car Parking System. As this parking management system is installed in ACET, Nagpur, we don't have to waste any more time on checking the available slot of parking physically, we have replaced the physical activity with a digital one, which might help us to save a major part of our time.

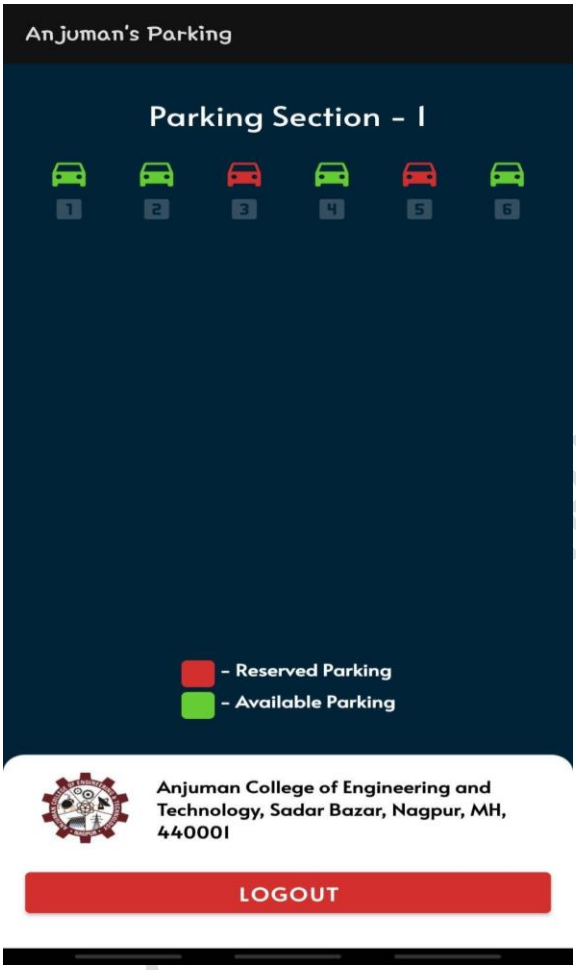

Fig (viii) Android Application

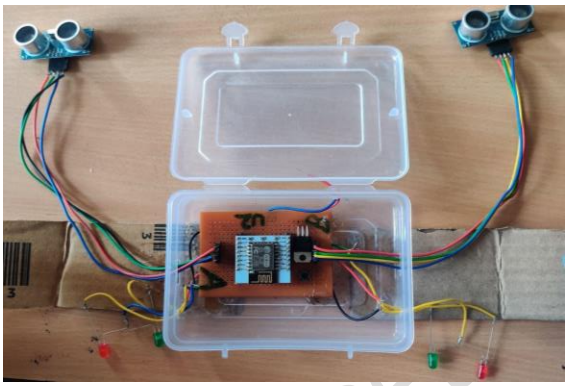

Fig (ix) IoT Module (Single Unit)

Acknowledgments

We would like to thank our guides for all the guidance and knowledge provided during this project work. Apart from that, we would also thank our guides for the extended support during our research paper writing.

References

[1] "Chaos on road due to inadequate parking space." [Online]. Available: https://www.newagebd.net/article/98843/chaos-on-roaddue-to-inadequate-parking-space. [Accessed: 23-Feb-2021].

[2] A. Kibria, "Addressing the problem of car parking," The Financial Express. [Online]. Available: https://thefinancialexpress.com.bd/views/addressing-problem-of-carparking-1555686704. [Accessed: 23-Feb-2021].

[3] A. Z. M. Tahmidul Kabir, A. M. Mizan, N. Debnath, A. J. Ta-sin, N. Zinnurayen, and M. T. Haider, "IoT Based Low-Cost Smart Indoor Farming Management System Using an Assistant Robot and Mobile App," 2020 10th Electrical Power, Electronics, Communications, Controls, and Informatics Seminar (EECCIS), Malang,

Indonesia, 2020, pp. 155-158, DOI: 10.1109/EECCIS49483.2020.9263478.

[4] S. Gautam, R. Pansare, A. Chaudhary, and K. Gupta, “People In Kuala Lumpur Waste 25 Minutes Every Day Looking For Parking,” Get My Parking Blog, 27-Mar-2020. [Online]. Available: https://blog.getmyparking.com/2020/03/04/people-in-kuala-lumpurwaste-25-minutes-every-day-looking-for-parking/. [Accessed: 28- Feb-2021].

[5] S. R. Rizvi, S. Zehra, and S. Olariu, "ASPIRE An Agent-Oriented Smart Parking Recommendation System for Smart Cities," in IEEE Intelligent Transportation Systems Magazine, vol. 11, no. 4, pp. 48- 61, winter 2019, DOI: 10.1109/MITS.2018.2876569.

[6] R. C. Luo and Z. Chen, "An innovative micro proximity sensor", Proc. 1993 JSME Int. Conf. Advanced Mechatronics, pp. 621-625, Aug. 1993.

[7] P. Melnyk, S. Djahel and F. Nait-Abdesselam, "Towards a Smart Parking Management System for Smart Cities," 2019 IEEE International Smart Cities Conference (ISC2), Casablanca, Morocco, 2019, pp. 542-546, doi:10.1109/ISC246665.2019.9071740.

[8] P. Sadhukhan, "An IoT-based e-parking system for smart cities", 2017 International Conference on Advances in Computing Communications and Informatics (ICACCI), pp. 1062-1066, Sep. 2017.

[9] W. Longfei, C. Hong, L. Yang, 00Integrating Mobile Agent with MultiAgent System for Intelligent Parking Negotiation and Guidance00, 4th IEEE Conference on Industrial Electronics and Applications, pp.1704- 1707, 25-27 May 2009.

[10] Z. Suryady et al, 00Rapid development of smart parking system with cloud-based platforms,00 In IEEE Fifth International Conference on Information and Communication Technology for The Muslim World (ICT4M), 2014, pp.