Journal of Engineering Sciences
Vol 13, Issue 06, June/2022
ISSN NO:0377-9254

Power quality improvement of solar pv system using universal active power filter

[1]Rondi Babu, ,[2] Ruheena Begum, [3]Buchala.Akanksha, [4]Rasamalla Rakesh Kumar, [5]Chinthala Supradeepa
[1]Associate professor,dept of EEE
[1,2,3,4,5],Jyothishmathi institute of technology and science karimnagar
[1]rondi.babu@jits.ac.in, [2]ruheena2020@gmail.com, [3]akankshabuchala232@gmail.com,[4]rakeshchinnu9160@gmail.com, [5]supradeepa2000@gmail.com

ABSTRACT

The structure of the Universal Active Power Filter Integrated With PV Array system is described. A three-phase DC-DC converter with two boost stages is utilized to link the UAPF to the PV array. Connecting compensators to distribution systems are filter inductors. Both the PCC and series active filter are powered by series transformers and function in tandem. The Universal Active Power Filter combined with PV array is described in detail. The PV array is connected to the DC-link of the Universal Active Power Filter Integrated With PV Array through a three-phase, double-stage boost DC-DC converter. This is accomplished by analyzing the distorted load currents. As a result, the shunt active filter is able to estimate the reference signal. This approach permits the extraction of the active component from all three stages, hence decreasing the required mathematical effort.

The notion of synchronous reference frame serves as the foundation for series active filter control. This control keeps the load and voltage in phase with the voltage at the common coupling point while regulating the load and voltage. This is done regardless of whether voltages are decreasing or increasing.

Keywords: Power quality, adaptive filtering, photovoltaic system, maximum power point tracking, and PI controller

1. INTRODUCTION

Since the need for solar and wind-powered clean energy systems has grown in the current distribution system, In this method[1], a model based on an adaptive filter is suggested for controlling a three-phase universal active power filter integrated DC Bus with solar PV panels.

The magnitude of the load distortion's fundamental active component is extracted using two adaptive filters with zero crossing detection algorithms. It has become a big problem in [2] the low voltage distribution system network because of the fluctuation in voltage. Modern power electronics are increasingly becoming more advanced as semiconductor devices improve. The same goes for computer power supplies, variable frequency drives, switched mode power supplies, and server power supplies, for example. Energy-efficient electrical gadgets require non-linear current from the source even if they consume less power [3]. As a result, Voltage disturbances are more sensitive than before. Non-linear current influences distribution transformer and common point coupling. "The clean energy with the best power quality are not demand of the next future" has been made plain in[4] this post. It also decreased our reliance on energy derived from fossil fuels.

Renewable energy sources are being linked with flexible AC transmission systems for unified power flow regulation, which could enhance the environment.

Large PV farms and FACTS devices like UPFC are utilised in transmission systems to increase the stability of the electricity supply. Power Quality Issues Any variation in[5] voltage, current, or frequency has an impact on the power quality. Problems with equipment sensitivity that are frequently encountered are as follows:

1. Power Surges
2. Transients
3. Frequency Variation
4. Electrical Line Noise
5. Brownouts or Blackouts
6. Power System Faults
7. Improper grounding

Among the main effects of these concerns is a rise in harmonics. End user equipment may be damaged as a result of the presence of harmonics. Heating of underground cables, insulation failure, reduced equipment life-span and increased losses are all a result of harmonics generated by these devices.

Filters that minimise harmonics are the most effective way to improve power quality. The literature describes a variety of filter topologies, including active, passive, and hybrid. Parallel resonance is a difficulty with passive power filters, which are used [6] to filter out a specific harmonic. The Active Power Filter is another option. Series APF and shunt APF are two examples of different forms of APF. Because of its high cost, the shunt APF can only be employed in small systems. the negative-sequence voltage can be reduced by using a series APF as a harmonic isolator Hybrid Filter is a filter topology that combines APF with passive filtering.

2. Proposed System

Power quality enhancement techniques and PV arrays

are reviewed in a literature review. DStatcom, the Unified Power Quality Controller, and other techniques for improving power quality are examined and contrasted in this study. The advantages and drawbacks of these and other methods are also considered. Small wind turbines are becoming more popular as a source of dispersed energy production. Wind energy conversion systems employ single-phase grid tie converters to link wind turbines directly to permanent-magnet synchronous generators.

Ripple currents at twice the grid frequency describe the dc link's load. There is a rise in heating and ripple torque due to these ripple currents being reflected into the PMSG through the dc bus. The dc-link voltage is controlled using a PMSG inverter, as shown in this work. The feedback dclink voltage is sent via a filter to prevent ripple currents from being reflected into the PMSG. These filters include the moving average filter and anti-resonant filter. To provide a fair comparison, filter parameter tuning methods are supplied to ensure that dc-link voltage control achieves the desired bandwidth for the application. Each of the filtering choices has a distinct effect on torque ripple. The notch filter, the ARF, and the MAF are the most effective, with a trade-off between complexity, bandwidth, overshoot, and reducing torque ripple.

Based on the p-q theory, a modified solar photovoltaic array controller with a unified power quality conditioner. The system is designed to provide clean energy and improve the quality of the electricity it produces, making it perform better overall. The PV-UPQC-S reference signals are estimated using the fundamental frequency positive sequence voltage components at the common coupling point in p-q theory-based control. This is accomplished by cancelling the signals one by one. PV-UPQCS control may be utilised with non-straight PCC voltages with a little tweak to p-q theory.

Researchers can use a duo-neutral-point clamped converter and a single-phase transformer-less hybrid series active filter to see how well hardware-in-the-loop solutions function in power electronics. This benchmark shows how smart grid power quality measurement can be done in real time and how well it works. It does this by using a quick switching process and a small sample time. Because of the nonlinear nature of the load, such applications need a compensator capable of addressing critical power quality concerns. For future grid applications, this compensator offers a cost-effective and dependable solution to voltage and current-related concerns, as well as helping to integrate renewable energy sources. Using a controller, voltage and current harmonics may be corrected.

The capacity to work on quality is changing as a result of power molding. In the case of a transitory (permanent) issue on the line, an uninterruptible power supply can be used to switch off mains power. Nonetheless, less priced UPS devices provide low-quality power, which is equivalent to superimposing a higher-frequency and lower-abundance square wave on a sine wave. Superior UPS devices employ a two-stage transition mechanism that converts incoming AC power into DC, charges the batteries, and then remanufactures an AC sine wave. This remanufactured sine wave outperforms the original AC power feed.
A flood defender or straightforward capacitor or varistor can safeguard against most overvoltage conditions, while a lightning arrestor safeguards against extreme spikes. Electronic channels can eliminate music.

A to some degree entertaining confusion that certain individuals might have is that the main spot that breeze power is used is in Holland, where windmills have existed for a really long time. Nearly as senseless most books about wind power don't perceive that breeze power has been seemingly the main energy structure man has at any point utilized. While talking about wind power, it is important to indicate what sort of wind power is implied. As the fuel for transportation, fishers or others utilizing boats have utilized the force of the breeze. The United States could honestly express that without the force of the breeze, Columbus and other European travelers probably won't have seen as the Western world. A more definite show of the historical backdrop of wind power is examined at one more page gave to showing the progressions in use of wind control over the long run. The force of the breeze is all over the place, and is found in most overflow in certain region of the world that are not very available to people. When in doubt, as the height is expanded, the breeze speed will likewise increment. Assume an individual chose to move to the of a two story building. Remaining on top of the structure, he can feel the extraordinary speed up contrasted with being on the ground. Wind power stations are in many cases tracked down in similar spot as enormous radio broadcast recieving wires. Similarly as the high height assists the radio transmissions with voyaging farther, the increment high above ocean level speeds up and assists the station with delivering more power. These goodies of wind power geology are extended at the breeze power topography page.

The D-NPC converter receives its switching signals from a proportional and resonant regulator. A solar photovoltaic grid-interconnected control approach with a single stage. The SPV array may interface with the utility grid via a voltage-source inverter.

The PVUPQC's load active current component is extracted using a moving average filter and improved synchronous reference frame control. Grid voltage sags and swells are taken into account by the series compensator. Under sag and swell situations, the compensator injects voltage in-phase or out-of-phase with the point of common coupling voltage. The advantages of renewable energy generation are paired with those of enhanced electrical quality as a

consequence of this technology.

3. Methodology that has been proposed

Adaptive filters are utilised to govern the three-phase universal active power filter of the DC bus integrated with the solar PV array in the suggested approach. The zero-crossing approach is used to obtain the fundamental active component of the distorted load current magnitude. It is also used to determine the shunt active filter's reference signal. Each step will result in activities that are specific to that phase. The synchronous reference frame theory is used to design the series active power filter that regulates the load voltage and keeps it in phase. A test system is coupled to a universal active power filter for harmonics mitigation caused by non-linear loads connected to a three-phase grid.

A worldwide active power filter is formed by connecting two VSCs in series and parallel to the PCC grid. The circuit is completed with a DC link capacitor. Power electronics switches are used in fuzzy controlled interface systems. At the DC voltage regulator, a PI controller is employed to replace the fuzzy interface system's two input variables and one output variable. The total harmonic distortion is compared to the source current using FFT analysis.

4. CONFIGURATION OF PV-UAPF SYSTEM

The architecture of the system known as the Universal Active Power Filter Integrated With PV Array is broken down here. A three-phase, double-stage boost DC-DC converter is utilized in order to establish a connection between the PV array and the DC-link of the UAPF.

The compensators are connected to the distribution system through the filter inductors. Power is supplied to both the primary current collector (PCC) and the series active filter by series transformers simultaneously. The structure of the system consisting of a Universal Active Power Filter Integrated With PV Array is described here. The DC-link of the Universal Active Power Filter Integrated With PV Array is connected to the PV array through the use of a boost DC-DC converter that is three-phased and double-staged.

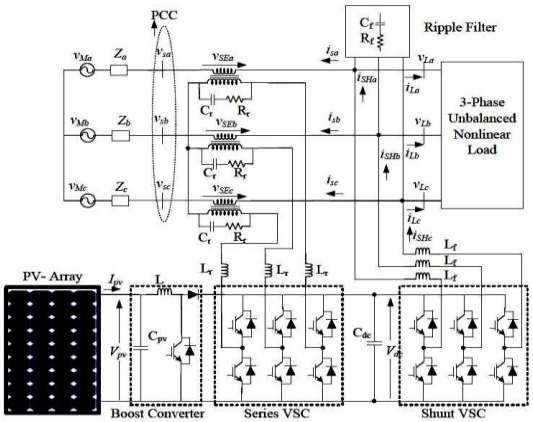

Fig. 1. . System configuration of UAPF-PV System

5 SYSTEM CONTROL

The Universal Active Power Filter Integrated With PV Array technology was designed with two primary objectives in mind: to eliminate nonlinear load harmonics and to shield sensitive loads from the fluctuations in voltage produced by the PCC. In addition, the Universal Active Power Filter Integrated With PV Array technology, which improves power quality by delivering clean electricity generated by PV systems into the distribution network, is now available. In the parts that are to follow, an explanation will be given on the operational differences between a series active filter and a shunt active filter. Handling of a Shunt Active Filter's Controls Figure 2 is a representation, in the form of a block diagram, of how the shunt active filter works. The basic positively sequenced component of the distorted load current is extracted from this distorted load current using a sequence filter of the second order, which is employed in this control system. The construction of the second-order sequence filter is illustrated in Figure 2. Sequence filters are well suited for usage in three-phase systems as a result of the fact that they eliminate the positive sequence components.

K1 and K2 are the two gains that regulate this structure. An attempt has been made to strike a balance between precision and dynamic reactivity when determining K1 and K2. explains in great detail how to choose the filter gain. Use of the second order sequence filter is used to estimate the fundamental frequency positive sequence component of the load current (FPSC). In order to determine how much current is being drawn from the load, it is necessary to estimate the amount of current flowing through the load's FPSC. Due to the fact that Clark transforms employ a magnitude-invariant transformation, the FPSC value of the load current is directly proportional to the active component of load currents.

This is effectively the grid current that the shunt compensator is looking for as a reference signal. A balanced and unbalanced signal is required for the reference signals. When it comes to the total amount of power that may be generated by solar panels, there are

three primary components: a basic active load power at nominal PCC voltage (ILp), grid current corresponding to PV power (Ipvg,) and loss component resulting from switches, losses in filters (etc).

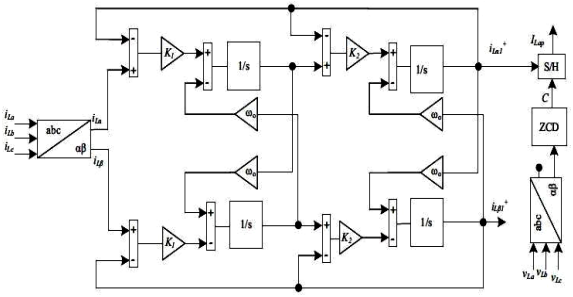

(a) Load Active Component Extraction Using Second Order Sequence Filter

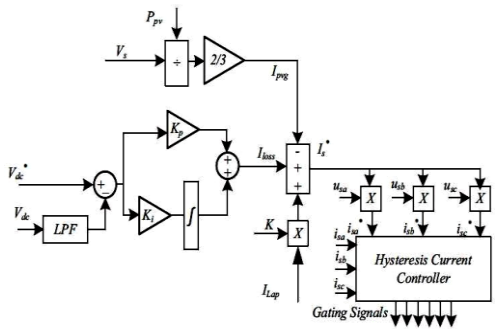

(b) Shunt Compensator Control Structure

Fig. .2. Shunt Compensator Control Based on second order sequence filter Filter

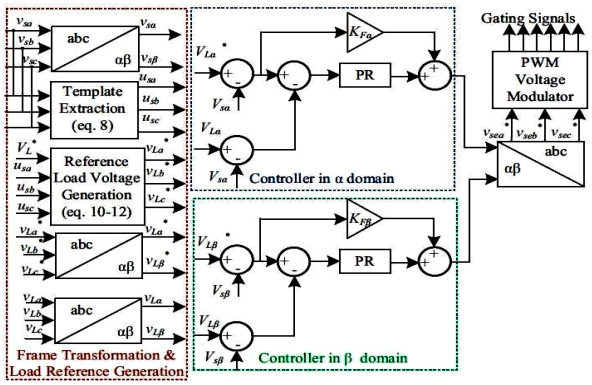

Fig.3. Series Active Filter Control Structure

C. Control of Boost DC-DC Converter

The result of the PV exhibit is expanded to its greatest limit thanks to the DC converter. A lift converter and a calculation called Maximum Power Point Tracking are used to achieve this objective. The annoy and-notice approach, the gradual conductance technique, and the fragmentary open circuit voltage strategy are the standard strategies for MPPT. In this examination, the P&O approach is applied to decide the most extreme power working place of the PV cluster. To control the lift converter, this method thinks about both the present and the authentic results of the sunlight based cluster.

6. SIMULATION RESULTS

The three-phase, double-stage procedure Modeling the Universal Active Power Filter Integrated With Pv Array system is accomplished via the usage of Matlab-Simulink software. The issue is solved using a discrete solution with a step size of 1e-6. Dynamic situations such as the balance of loads, fluctuations in irradiation and in voltage, and more are all utilised to assess the system.

6.1 SIMULINK DIAGRAMS:

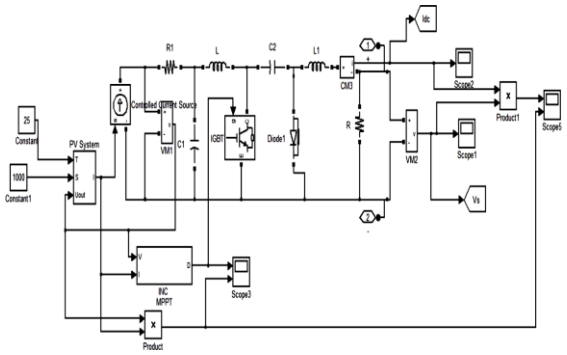

Fig 4 Simulink circuit diagram

6.2 OUTPUT WAVEFORMS:

Voltage sag:

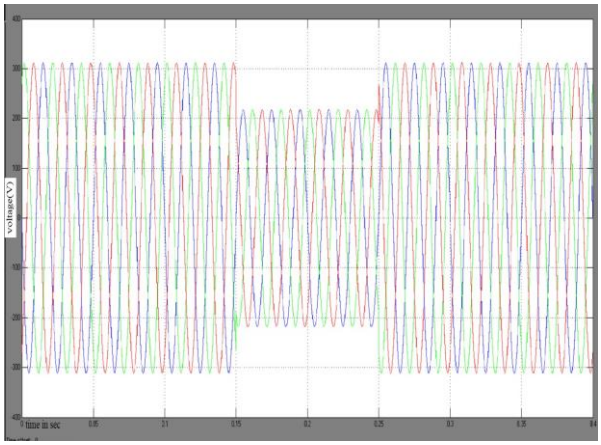

Fig5: voltage sag (with out UAPF):

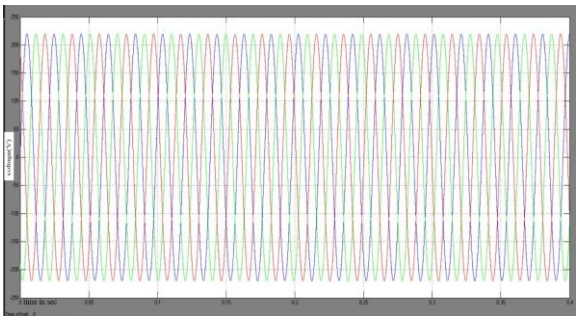

Fig6: voltage sag(with UAPF):

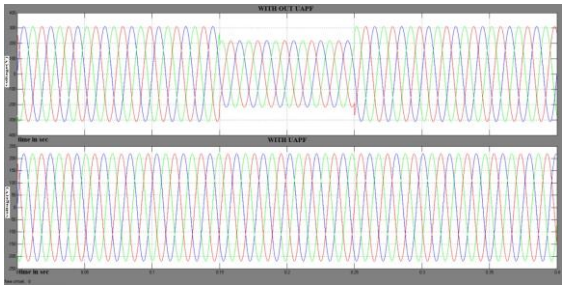

Fig7: Load voltage:

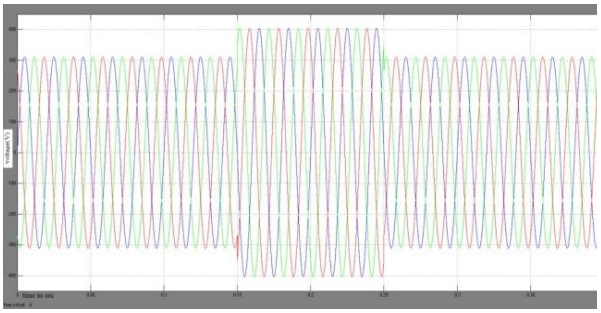

Fig7: **voltage swell (with out UAPF):**

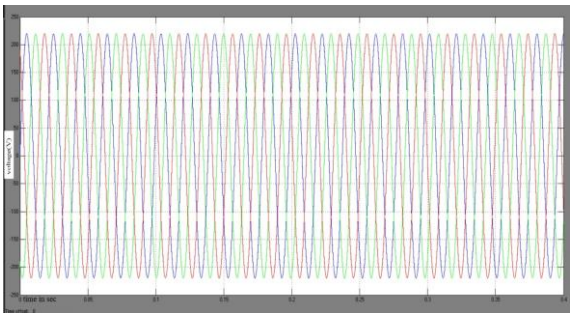

Fig8: voltage swell (with UAPF):

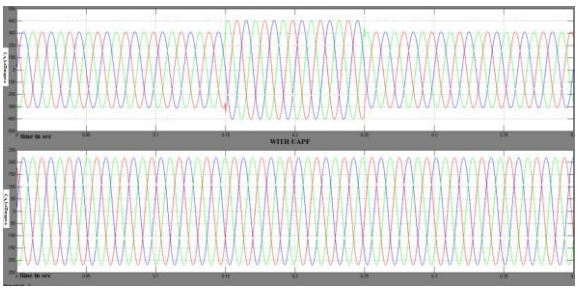

Fig9: **3phase Load voltage:**

voltage and current waveform

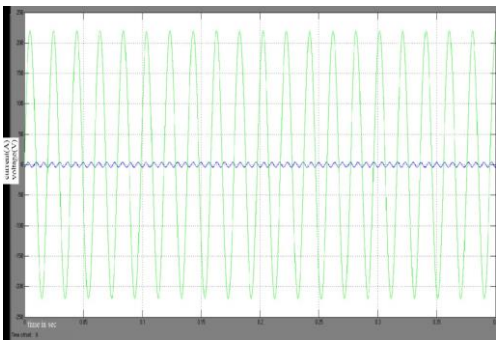

Fig 10: source current and loavoltage:

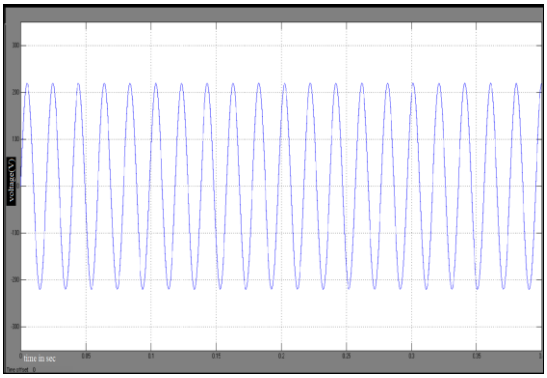

Fig 11: load voltage : (phase A voltage)

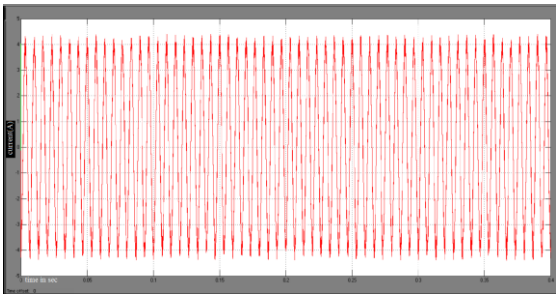

Fig12 : source current : (phase A current)

THD values:

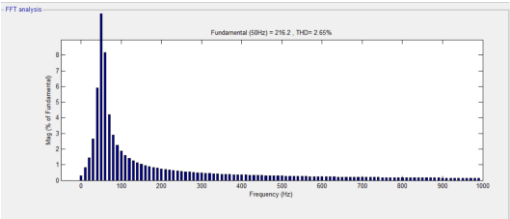

Fig 13 : THD of sag:

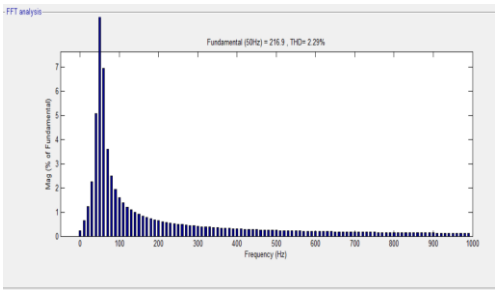

Fig 14: THD of swell:

CONCLUSION

The performance of a new photovoltaic System control method with global performing its duties was evaluated. 2nd sequence filters and zero cross detection are used to recover the essential positive sequence components of nonlinear load currents. A proportional resonant controller built in the domain and a feed forward component control the series active filter. With PCC voltage dips and increases, variations in sun radiation, and load fluctuations, the system functions well. In addition to enhancing the quality of the power, the technology feeds electricity from a photovoltaic array into the grid. Comparing the suggested control to traditional control approaches with minimal computing load demonstrates that the system performs better than the usual methods. Power quality is improved by integrating dispersed generating into the grid.

REFERENCE

[1] S. J. Pinto, G. Panda, and R. Peesapati, " An implementation of hybrid control strategy for distributed generation system interface using xilinx system generator," IEEE Transactions on Industrial Informatics, vol. 13, no. 5, pp. 2735– 2745, Oct 2017.

[2] B. Singh, A. Chandra, K. A. Haddad, Power Quality: Problems and Mitigation Techniques. London: Wiley, 2015.

[3] S. Singh, B. Singh, G. Bhuvaneswari, and V. Bist, " A power quality improved bridgeless converter-based computer power supply," IEEE Transactions on Industry Applications, vol. 52, no. 5, pp. 4385– 4394, Sept 2016.

[4] M. Peterson and B. N. Singh, " Multipulse controlled ac-dc converters for harmonic mitigation and reactive power management," IET Power Electronics, vol. 2, no. 4, pp. 443– 455, July 2009.

[5] B. Singh, M. Kandpal, and I. Hussain, " Control of grid tied smart pvdstatcom system using an adaptive technique," IEEE Transactions on Smart Grid, vol. 9, no. 5, pp. 3986– 3993, Sept 2018.

[6] Y. Singh, I. Hussain, S. Mishra, and B. Singh, " Adaptive neuron detection-based control of single-phase spv grid integrated system with active filtering," IET Power Electronics, vol. 10, no. 6, pp. 657– 666, 2016.

[7] C. Jain and B. Singh, " An adjustable dc link voltage-based control of multifunctional grid interfaced solar pv system," IEEE Journal of Emerging and Selected Topics in Power Electronics, vol. 5, no. 2, pp. 651– 660, June 2017.

[8] S. Devassy and B. Singh, " Implementation of solar photovoltaic system with universal active filtering capability," in 2018 IEEMA Engineer Infinite Conference (eTechNxT), March 2018, pp. 1– 7.

[9] S. Devassy and B. Singh, " Design and performance analysis of three phase solar PV integrated UPQC," IEEE Transactions on Industry Applications, vol. PP, no. 99, pp. 1– 1, 2017. [10] S. Devassy and B. Singh, " Control of a solar photovoltaic integrated universal active power filter based on a discrete adaptive filter," IEEE Transactions on Industrial Informatics, vol. 14, no. 7, pp. 3003– 3012, July 2018.

[10] R. Chilipi, N. A. sayari, K. H. A. Hosani, and A. R. Beig, " Adaptive notch filter based multipurpose control scheme for grid-interfaced threephase four-wire dg inverter," IEEE Trans. Ind. Appl., vol. PP, no. 99, pp. 1– 1, 2017.

[11] M. Badoni, A. Singh, and B. Singh, " Comparative performance of wiener filter and adaptive least mean square-based control for power quality improvement," IEEE Trans. Ind. Electron., vol. 63, no. 5, pp. 3028– 3037, May 2016.

[12] B. Singh, S. Kumar, and C. Jain, " Damped-SOGI based control algorithm for solar pv power generating system," IEEE Trans. Ind. Appl., vol. 53, no. 3, pp. 1780– 1788, May 2017.

[13] Z. Xin, R. Zhao, P. Mattavelli, P. C. Loh, and F. Blaabjerg, " Reinvestigation of generalized integrator based filters from a first-ordersystem perspective," IEEE Access, vol. 4, pp. 7131– 7144, 2016.

[14] M. Qasim and V. Khadkikar, " Adaline based control strategy for threephase three-wire upqc system," in 2014 16th International Conference on Harmonics and Quality of Power (ICHQP), May 2014, pp. 586– 590.

[15] N. Karthikeyan, M. K. Mishra, and B. K. Kumar, " Complex wavelet based control strategy for upqc," in 2010 Joint International Conference on Power Electronics, Drives and Energy Systems 2010 Power India, Dec 2010, pp. 1– 6.

[16] A. B. Shitole, H. M. Suryawanshi, G. G. Talapur, S. Sathyan, M. S. Ballal, V. B. Borghate,

[17] M. R. Ramteke, and M. A. Chaudhari, " Grid interfaced distributed generation system with modified current control loop using adaptive synchronization technique," IEEE Trans. Ind. Electron., vol. 13, no. 5, pp. 2634– 2644, Oct 2017.

[18] [18] N. Kumar, I. Hussain, B. Singh, and B. K. Panigrahi, " Framework of maximum power extraction from solar pv panel using self predictive perturb and observe algorithm," IEEE Transactions on Sustainable Energy, 2017, Early Access.