Journal of Engineering Sciences
Vol 13, Issue 06, June/2022
ISSN NO:0377-9254

IOT UNDERGROUND CABLE FAULT DETECTOR

1 DHARANI KATTA, 2 SAINATH REDDY IMMAREDDY, 3 SUBHASH REDDY BYREDDY, 4 MR.S.MOHAN DAS, 5 DR.G.LAKSHMINARAYANA
123B.TECH STUDENT, 4ASSISTANT PROFESSOR,5PROFESSOR
DEPT OF ECE
SVR ENGINEERING COLLEGE, NANDYAL

Abstract: Underground cables are prone to a wide variety of faults due to underground conditions, wear and tear, rodents etc. Also detecting fault source is difficult and entire line is to be dug in order to check entire line and fix faults. So here we propose an cable fault detection over IOT that detects the exact fault position over iot that makes repairing work very easy. The repairmen know exactly which part has fault and only that area is to be dug to detect the fault source. This saves a lot of time, money and efforts and also allows to service underground cables faster. We use IOT technology that allows the authorities to monitor and check faults over internet. The system detects fault with the help of potential divider network laid across the cable. Whenever a fault gets created at a point shorting two lines together, a specific voltage gets generated as per the resistors network combination. This voltage is sensed by the microcontroller and is updated to the user. The information conveyed to the user is the distance to which that voltage corresponds to. The microcontroller retrieves the fault line data and displays over LCD display, also it transfers this data over internet to display online. We use telnet app to develop the online system that links with the system to display the cable faults online.

I. INTRODUCTION

The objective of this project is to determine the distance of underground cable fault from base station in kilometers. The underground cable system is a common practice followed in many urban areas. While a fault occurs for some reason, at that time the repairing process related to that particular cable is difficult due to not knowing the exact location of the cable fault. The proposed system is to find the exact location of the fault.

The project uses the standard concept of Ohms law i.e., when a low DC voltage is applied at the feeder end through a series resistor (Cable lines), then current would vary depending upon the location of fault in the cable. In case there is a short circuit (Line to Ground), the voltage across series resistors changes accordingly, which is then fed to an ADC to develop precise digital data which the programmed microcontroller of 8051 family would display in kilometers.

The project is assembled with a set of resistors representing cable length in KM's and fault creation is made by a set of switches at every known KM to cross check the accuracy of the same. The fault occurring at a particular distance and the respective phase is displayed on a LCD interfaced to the microcontroller.

Further this project can be enhanced by using capacitor in an ac circuit to measure the impedance which can even locate the open circuited cable, unlike the short circuited fault only using resistors in DC circuit as followed in the above proposed project.

The objective of this project is to determine the distance of underground cable fault from base station in kilometers. The underground cable system is a common practice followed in manyurban areas. While a fault occurs for some reason, at that time the repairing process related to that particular cable is difficult due to not knowing the exact location of the cable fault. The proposed system is to find the exact location of the fault. The project uses the standard concept of Ohms law i.e., when a low DC voltage is applied at the feeder end through a series resistor (Cable lines), then current would vary depending upon the location of fault in the cable. In case there is a short circuit (Line to Ground), the voltage across series resistors changes accordingly, which is then fed to an ADC to develop precise digital data which the programmed microcontroller of 8051 family would display in kilometers. In the urban areas, the electrical cable runs underground instead of overhead lines. Whenever the fault occurs in underground cable it is difficult to detect the exact location of the fault for process of repairing that particular cable. The proposed system detects the exact location of the fault and by the means of IOT it's serially communicated towards server. Since problem that

occurs in underground cable is a big problem till now. As it is very difficult to find the exact location or faulty location manually, which suddenly affects the efficiency of the cable wire due to losses occurred. Till now many techniques had already been implemented in order to detect fault in cable wire. But the problem came up is how to detect fault in cable wire when it is under grounded, and how to access or retrieve those data related to faulty location whenever it is required. In order to fill those gaps, we proposed the system which detects the exact location of the fault and through the means of IOT it's serially communicated towards server. Through previous researches many techniques came up which were useful to overcome the problem up to some extent. In one of the paper by K.Hasan, et.al. says that-failure and degrading of air craft wiring is a big concern which could further lead to fire and smoke because of arcing .But the proposed technique based on TDR, in which train of pulses are generated in order to detect the fault. Fault can be classified as two groups: Fault in cable can be classified in two groups: 1) Open circuit fault: Open circuit faults are better than short circuit fault, because when this fault occurs current flows through cable becomes zero. This type of fault is caused by break in conducting path. Such faults occur when one or more phase conductors break. 2) Short circuit fault: Further short circuit fault can be categorized in two types: a) Symmetrical fault: Three-phase fault is called symmetrical fault. In this all three phases are short circuited. b) Unsymmetrical fault: In this fault magnitude of current is not equal¬ displaced by 120 degree. Fault location method: Fault location methods can be classified as: 1)Online method: This method utilize process the sampled voltages& current to determine the fault points. Online method for underground cable is less than overhead lines. 2) Offline method: In this method special instrument is used to test out service of cable in the field. There are two offline methods as following a) Tracer method: In this method fault point is detected by walking on the cable lines. Fault point is indicated from audible signal or electromagnetic signal .It is used to pinpoint fault location very accurately.

II. LITERATURE REVIEW

Till last decades cables were made to lay overhead& currently it is lay to underground cable which is superior to earlier method. Because the underground cable are not affected by any adverse weather condition such as storm,snow,heavy rainfall as well as pollution.But when any fault occur in cable,then it is difficult to locate fault.So we will move to find the exact location of fault.Now the world is become digitalized so the project is intended to detect the location of fault in digital way. The underground cable system is more common practice followed in many urban areas. While fault occurs for some reason,at that time the repairing process related to that particular cable is difficult due to not knowing the exact location of cable fault.

Fault in cable is represented as:

- Any defect,
- Inconsistency,
- Weakness or non-homogeneity that affect performance of cable .

III. DESIGN OF HARDWARE

This chapter briefly explains about the Hardware implementation of authentication of iot based underground cable fault detection. It discuss the circuit diagram of each module in detail.

3.1.ARDUINO UNO

The Arduino Uno is a microcontroller board based on the ATmega328 (datasheet). It has 14 digital input/output pins (of which 6 can be used as PWM outputs), 6 analog inputs, a 16 MHz ceramic resonator, a USB connection, a power jack, an ICSP header, and a reset button. It contains everything needed to support the microcontroller; simply connect it to a computer with a USB cable or power it with a AC-to-DC adapter or battery to get started.

The Uno differs from all preceding boards in that it does not use the FTDI USB-to-serial driver chip. Instead, it features the Atmega16U2 (Atmega8U2 up to version R2) programmed as a USB-to-serial converter. Uno board has a resistor pulling the 8U2 HWB line to ground, making it easier to put into DFU mode.Arduino board has the following new features:

- 1.0 pinout: added SDA and SCL pins that are near to the AREF pin and two other new pins placed near to the RESET pin, the IOREF that allow the shields to adapt to the voltage provided from the board. In future, shields will be compatible both with the board that use the AVR, which operate with 5V and with the Arduino Due

that operate with 3.3V. The second one is a not connected pin, that is reserved for future purposes.

- Stronger RESET circuit.
- Atmega 16U2 replace the 8U2.

"Uno" means one in Italian and is named to mark the upcoming release of Arduino 1.0. The Uno and version 1.0 will be the reference versions of Arduino, moving forward. The Uno is the latest in a series of USB Arduino boards, and the reference model for the Arduino platform; for a comparison with previous versions, see the index of Arduino boards.

Fig: ARDUINO UNO

3.2. POWER SUPPLY

The power supplies are designed to convert high voltage AC mains electricity to a suitable low voltage supply for electronic circuits and other devices. A power supply can by broken down into a series of blocks, each of which performs a particular function. A d.c power supply which maintains the output voltage constant irrespective of a.c mains fluctuations or load variations is known as "Regulated D.C Power Supply".

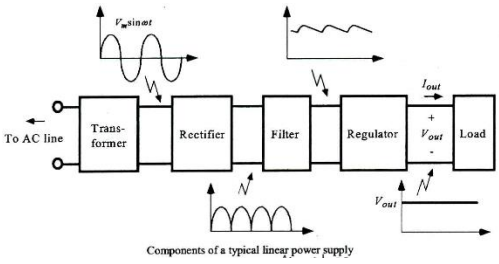

Fig:Power Supply

3.3 LCD

Liquid Crystal Display also called as LCD is very helpful in providing user interface as well as for debugging purpose. The most commonly used Character based LCDs are based on Hitachi's HD44780 controller or other which are compatible with HD44580. The most commonly used LCDs found in the market today are 1 Line, 2 Line or 4 Line LCDs which have only 1 controller and support at most of 80 characters, whereas LCDs supporting more than 80 characters make use of 2 HD44780 controllers

3.4RELAYS

We know that most of the high end industrial application devices have relays for their effective working. Relays are simple switches which are operated both electrically and mechanically. Relays consist of a n electromagnet and also a set of contacts. The switching mechanism is carried out with the help of the electromagnet. There are also other operating principles for its working. But they differ according to their applications. Most of the devices have the application of relays.

The main operation of a relay comes in places where only a low-power signal can be used to control a circuit. It is also used in places where only one signal can be used to control a lot of circuits. The application of relays started during the invention of telephones. They played an important role in switching calls in telephone exchanges. They were also used in long distance telegraphy. They were used to switch the signal coming from one source to another destination.

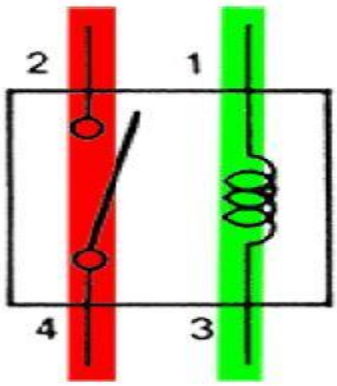

Fig: relay

3.5 SWITCH

In electrical engineering, a **switch** is an electrical component that can disconnect or connect the conducting path in an electrical circuit, interrupting the electric current or diverting it from one conductor to another.[1][2] The most common type of switch is an electromechanical device consisting of one or more sets of movable electrical contacts connected to external circuits. When a pair of contacts is touching current can pass between them, while when the contacts are separated no current can flow.

Switches are made in many different configurations; they may have multiple sets of contacts controlled by the same knob or actuator, and the contacts may operate simultaneously, sequentially, or alternately. A switch may be operated manually, for example, a light switch or a keyboard button, or may function as a sensing element to sense the position of a machine part, liquid level, pressure, or temperature, such as a thermostat. Many specialized forms exist, such as the toggle switch, rotary switch, mercury switch, push-button switch, reversing switch, relay, and circuit breaker. A common use is control of lighting, where multiple switches may be wired into one circuit to allow convenient control of light fixtures. Switches in high-powered circuits must have special construction to prevent destructive arcing when they are opened.

The most familiar form of switch is a manually operated electromechanical device with one or more sets of electrical contacts, which are connected to external circuits. Each set of contacts can be in one of two states: either "closed" meaning the contacts are touching and electricity can flow between them, or "open", meaning the contacts are separated and the switch is nonconducting. The mechanism actuating the transition between these two states (open or closed) is usually (there are other types of actions) either an "*alternate action*" (flip the switch for continuous "on" or "off") or "*momentary*" (push for "on" and release for "off") type.

3.6 BUZZER DRIVER CIRCUIT:

Digital systems and microcontroller pins lack sufficient current to drive the circuits like relays, buzzer circuits etc. While these circuits require around 10milli amps to be operated, the microcontroller's pin can provide a maximum of 1-2milli amps current. For this reason, a driver such as a power transistor is placed in between the microcontroller and the buzzer circuit.

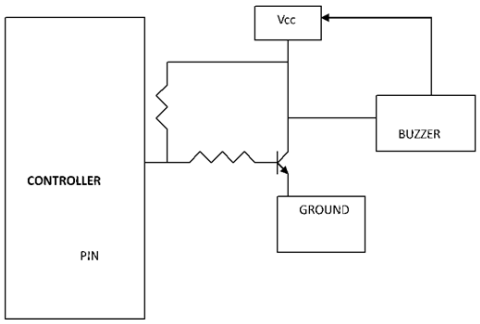

The operation of this circuit is as follows:

The input to the base of the transistor is applied from the microcontroller port pin P1.0. The transistor will be switched on when the base to emitter

3.7 ESP8266 WIFI

The **ESP8266** is a low-cost Wi-Fi microchip with full TCP/IP stack and microcontroller capability produced by Shanghai-based Chinese manufacturer, Espressif Systems.[1]

The chip first came to the attention of western makers in August 2014 with the **ESP-01** module, made by a third-party manufacturer, Ai-Thinker. This small module allows microcontrollers to connect to a Wi-Fi network and make simple TCP/IP connections using Hayes-style commands. However, at the time there was almost no English-language documentation on the chip and the commands it accepted.[2] The very low price and the fact that there were very few external components on the module which suggested that it could eventually be very inexpensive in volume, attracted many hackers to explore the module, chip, and the software on it, as well as to translate the Chinese documentation.[3]

The **ESP8285** is an ESP8266 with 1 MiB of built-in flash, allowing for single-chip devices capable of connecting to Wi-Fi.[4]

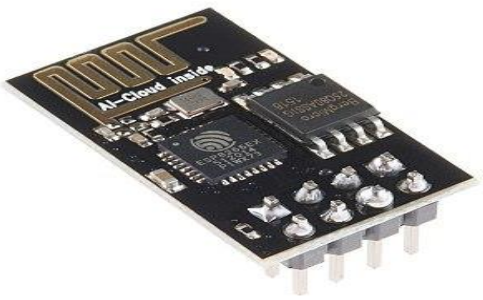

IV. PROJECT DESCRIPTION

The objective of this project is to determine the distance of underground cable fault from base station in kilometers.

4.1. BLOCK DIAGRAM:

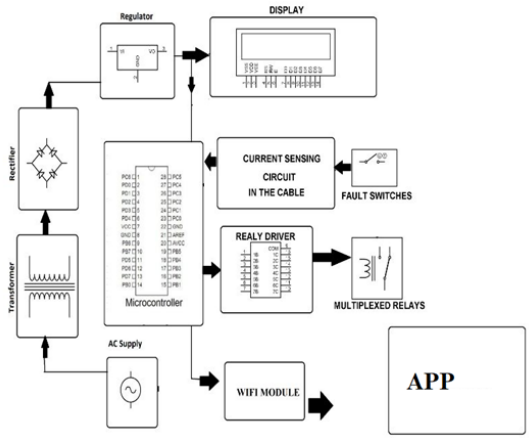

Fig : block diagram

WORKING: The project uses the standard concept of Ohms law i.e., when a low DC voltage is applied at the feeder end through a series resistor (Cable lines), then current would vary depending upon the location of fault in the cable. In case there is a short circuit (Line to Ground), the voltage across series resistors changes accordingly, which is then fed to an ADC to develop precise digital data which the programmed microcontroller of 8051 family would display in kilometers.

The project is assembled with a set of resistors representing cable length in KM's and fault creation is made by a set of switches at every known KM to cross check the accuracy of the same. The fault occurring at a particular distance and the respective phase is displayed on a LCD interfaced to the microcontroller.

Further this project can be enhanced by using capacitor in an ac circuit to measure the impedance which can even locate the open circuited cable, unlike the short circuited fault only using resistors in DC circuit as followed in the above proposed project.

V.CONCLUSION

In this paper we detect the exact location of short circuit fault in the underground cable from feeder end in km by using microcontroller.For this we use simple concept of OHM's law sofault can be easily detected and repaired.

REFERENCES

[1] Qinghai Shi, Troeltzsch U, Kanoun O. Detection and localization of cable faults by time and
frequency domain measurements. Conf. Systems and Signals and Devices, 7th International conference, Amman. 2010; 1-6.
[2] B. Clegg, Underground Cable Fault Location. New York: McGraw- Hill, 1993.
[3] M.-S. Choi, D.-S. Lee, and X. Yang, "A line to ground fault location algorithm for
underground cable system," KIEE Trans. Power Eng., pp. 267–273, Jun. 2005.
[4] E. C. Bascom, "Computerized underground cable faultlocation expertise, "in Proc. IEEE
Power Eng. Soc.General Meeting, Apr. 10–15,1994, pp. 376–382.J. Clerk Maxwell, A Treatise on Electricity and Magnetism, 3rded., vol. 2. Oxford: Clarendon, 1892, pp.68–73.
[5] K.K. Kuan, Prof. K. Warwick, " Real-time expert system for fault location on high voltage
underground distribution cables", IEEE PROCEEDINGS-C, Vol. 139, No. 3, MAY 1992.
[6] J. Densley, "Ageing mechanisms and diagnostics for power cables—an overview," IEEE Electr. Insul. Mag., vol. 17, no. 1, pp. 14–22, Jan./Feb. 2001.
[7] T. S. Sidhu and Z. Xu, "Detection of incipient faults in distribution underground cables",
IEEE Trans. Power Del., vol. 25, no. 3, pp. 1363–1371, Jul. 2010.
[8] Tarlochan S. Sidhu, Zhihan Xu, "Detection of Incipient Faults in Distribution Underground
Cables", IEEE Transactions on Power Delivery, Vol. 25, NO. 3, JULY 2010.
[9] Md. Fakhrul Islam, Amanullah M T Oo, Salahuddin. A. Azad1 , "Locating Underground
Cable Faults: A Review and Guideline for New Development" , 2013 IEEE
[10] http://www.scribd.com