TIME BASED POWER DISTRIBUTION IN URBAN AND RURAL AREAS IN POWER SHORTAGE CONDITIONS

Dr. G. CHENNA KESHAVA REDDY[1], G.GNANA SAI KRISHNA CHARY [2], SAI KOWSHIKI RANI BANDI[3], SOWMYA YADA [4], AJAY REDDY G[5].

[1]*Associate Professor, Dept. of ECE, TKR COLLEGE OF ENGINEERING AND TECHNOLOGY*

[234]*B.Tech Students, Dept. of ECE, TKR COLLEGE OF ENGINEERING AND TECHNOLOGY*

ABSTRACT

This paper is designed around a microcontroller which forms the heart of the project. In our project we are going to make use of a device called RTC which stands for Real Time Clock. This provides the details such as day month year date and time according to which the machines are made ON and OFF. The RTC is interfaced with microcontroller to communicate and hence to get the information such as time etc. and controls the switching of devices. The microcontroller communicates with RTC through a serial synchronous protocol called I2C. .And accordingly the lights are made ON and OFF. The control unit consists of a microcontroller with its associated circuitry. According to this project, the day and night timings are found with the help of RTC and lights are switched accordingly. The hardware involved in the project is Power supply, Microcontroller, RTC and light. After set the predefined times, micro controller will control the devices in that predefined interval of time to control the machine and devices.

INTRODUCTION

The recent growth of inverter-interfaced grid-connected distributed generation (DG) in Australian distribution networks (DNs) has been a contentious issue within the power community of late. There are many advantages of grid-connected DG, including promoting the use of renewable energy resources, improving fault ride-through, reducing losses in the DN and deferring infrastructure upgrades for the utility. However, there are also various potential complications involved with grid-connected DG. Most notably, power quality problems such as over-voltage (OV) may arise as well as protection maloperation [1], [2], [3]. Utilities have recorded instances of OV at the point of common coupling (PCC) of DG units and have subsequently imposed limits on the maximum size of a DG installation [4]. OV incidents generally occur under low local load conditions in networks where a significant short circuit impedance exists between the DG unit and the nearest upstream voltage

regulated point. Grid-connected DG units do not explicitly regulate voltage. DG units most commonly regulate the output real power at unity power factor; the resultant frequency and voltage are line-commutated [5], [6]. Possible OV prevention methods in DNs with a significant DG presence have been investigated by various authors. These methods shall be reviewed in Section II. The difficulty of OV prevention arises through the conflict between the business case for DG installation and the technical requirements stipulated within the Australian and IEEE Standards. A customer wishes to output as much energy as possible to maximise their return. However, if a maximum power output results in an OV situation, the loss of equipment life is generally more expensive than the extra income earned throughout the low load condition period. To satisfy both the technical and economic demands of DG connection, many papers have discussed the use of reactive power absorption in order to mitigate the voltage rise while still allowing maximum apparent power output [1], [7]. This paper shall provide a novel control scheme for multiple DG units that ensures fair return on investment and maintains the voltage of the grid within the stipulated bounds expressed in [8]. Inverters have been adopted as the preferred DG grid interface within this paper for a variety of reasons. Firstly, inverters have become increasingly popular in Australian DNs; installations have dramatically increased due to government incentives and the cost of infrastructure and installation has consistently decreased over the last several years [9]. Secondly, the robust nature of inverter control is imperative for the advanced control schemes required to allow DNs to function as desired when a high DG penetration is present. Finally, the decoupling of the dynamic response of the energy resource from the grid is essential for seamless integration of the DN with the stochastic nature of renewable energy resources. Furthermore, more progressive notions such as the Microgrid concept require fast load following via droop control during intentional islanding operation which is best realised through use of an inverter interface.

Now a day's every system is automated in order to face new challenges. In the present days Automated systems have less manual operations, flexibility, reliability and accurate. Due to this demand every field prefers automated control systems. Especially in the field of electronics automated systems are giving good performance. Sometimes the term automation means with less intervention of human.The main goal of our project “TIME BASED POWER DISTRIBUTION SYSTEM IN URBAN/RURAL AREAS IN POWER SHORTAGE CONDITIONS” is to control the machine. This allows us to realize the task efficiently and effectively without the intervention of human by making it automated and even we can avoid

unnecessary wastage of power by switching it off at right time. This project is designed around a microcontroller which forms the heart of the project. In our project we are going to make use of a device called RTC which stands for Real Time Clock. This provides the details such as day month year date and time according to which the machines are made ON and OFF. The RTC is interfaced with microcontroller to communicate and hence to get the information such as time etc and controls the switching of devices. The microcontroller communicates with RTC through a serial synchronous protocol called I2C. .And accordingly the lights are made ON and OFF. The control unit consists of a microcontroller with its associated circuitry. According to this project, the day and night timings are found with the help of RTC and lights are switched accordingly. The hardware involved in the project is Power supply, Microcontroller, RTC and light. After set the predefined times, micro controller will control the devices in that predefined interval of time to control the machine and devices.

LITERATURE SURVEY

The power demand in real time world is rapidly increasing day by day. Starting from daily needs of a human being to the industrial needs the electric power play a very crucial Supplying huge and continuous power is the biggest challenging task for the existing power system. In an attempt of supplying a continuous power for the consumers, the distributed generation (dispersed generation, decentralized generation and embedded generation) are introduced and it is integrated to the power grid. Distribution generation is the process of generating electricity at the customer end by the customer that may be interconnected to the distribution grids. Power generated by these distributed generation will be fed to the main grid through proper integration. The integration of DG's into the main grid imposes many problems on the grid. The integration of DG's, load fluctuation, sudden changes in loads, electronic equipments all are adversely effects on main grid power quality. The main intention of penetration of DG's into the main grid is to supply peak load and to fulfil consumer demand. But the penetration point of DGs is selected by the customer that may inappropriate. Therefore it adversely effects on distribution system power, protection and power quality. The power quality issues include a deviation in the voltage level, frequency and current from its standard value as defined by the IEEE standard 929-2000. Also DG's will affect steady state stability of the power system for the consumer. In India, around 22% of electricity produced is lost in distribution system. Therefore reducing the system losses and improving the power quality attracts many researchers, academicians and industrialist in the last fifteen years [1]-[55]. This paper proposes taxonomy of power quality enhancement techniques and control

strategies with and without DGs in distribution system, contributing a consolidated work carried out related to the subject. The handouts provides in depth knowledge about the work done in improving the power quality using various methods [1]-[55]. This literature survey serves as a guide for the researchers in power quality improvement. t. This paper put forward a various optimal control systems and ideas, offering the contributions towards PQI of all the reviewed papers. The main objective functions considered by various authors in the literature are as follows: 1) minimization of voltage fluctuation 2) Minimization of supply frequency fluctuation 3) control of voltage (for short and long duration) 4) elimination of harmonics 5) reducing the real and reactive power losses 6) minimization of utilization cost. The objective functions of PQI methods can be single-objective or multi-objective. The distribution system can be more sensitive for various electrical variables such as voltage, reactive power, etc. Therefore, the analysis of system conditions also plays a major role in designing a system to enhance power quality. The reviewed paper having different system conditions without and with high and low penetration of DGs. The IEEE standard systems are also considered to test the proposed control system by the reviewer under faulty conditions. D. Load Variables The load profile is considered in PQI as: 1) balance loads 2) unbalanced loads 3) time-varying loads 4) fuzzy 5) one load level 6) multi-load level. The load can be connected to a system along the line or it may be concentrated on system buses. For concentrated type load, the loads are: 1) Constant power type 2) Variable power 3) balanced and 4) unbalanced E.

PROPOSED SYSTEM

This project is designed around a microcontroller which forms the heart of the project. In our project we are going to make use of a device called RTC which stands for Real Time Clock. This provides the details such as day month year date and time according to which the machines are made ON and OFF. The RTC is interfaced with microcontroller to communicate and hence to get the information such as time etc and controls the switching of devices. The microcontroller communicates with RTC through a serial synchronous protocol called I2C. And accordingly the lights are made ON and OFF. The control unit consists of a microcontroller with its associated circuitry. According to this project, the day and night timings are found with the help of RTC and lights are switched accordingly.

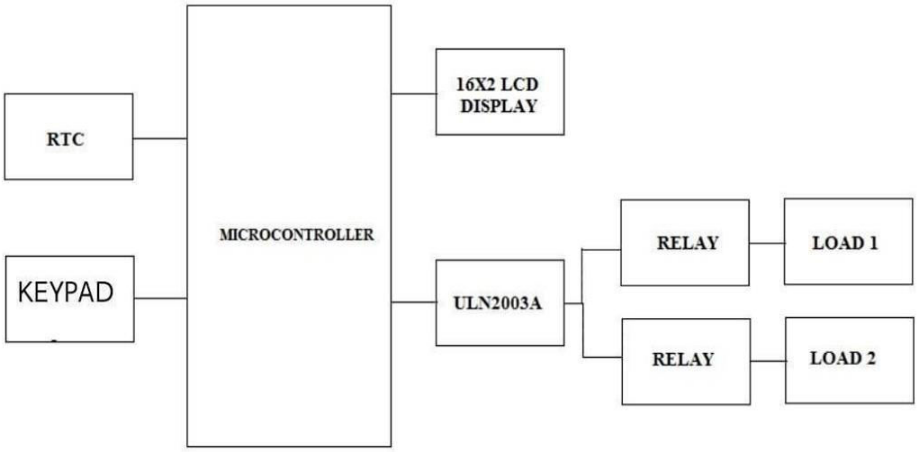

Fig 1 Block diagram

The hardware involved in the project is Power supply, Microcontroller, RTC and light. After set the predefined times, micro controller will control the devices in that predefined interval of time to control the machine and devices.

ADVANTAGES

Less Man power.

Easy to use.

High Accuracy.

High Reliability.

APPLICATIONS

Power Stations.

Industries.

Data centers

CONCLUSION

Effective power distribution in rural and urban areas is always important it optimizes efficiency and reduces the wastage of power and it increases reliability and guarantees the safety of the staff and the power distribution will be done accurate and the it takes less manual operations and is flexible and especially in the field of electronics automated systems are giving good performance.

FUTURE SCOPE

In future everything is automated and we can further extend this project to oil refinery industries and we can extend this project to water purification system using dams as the water purifies automatically and as power generates from water then it also becomes cost effective. Literature offers no clear and current methodology to mitigate all the power quality issues. There is need of some cost-effective novel methods for this problem. Most of the analysis is

carried out by considering load is linear, non-linear and constant but practically load is variable with respect to time. By considering all the research gap found in literature, some of the methods are proposed which can successfully fill the gap

REFERENCES

[1] Joel Kennedy, Phil Ciufo and Ashish Agalgaonkar, ”Overvoltage mitigation within distribution networks with a high renewable distributed generation penetration,” IEEE International Energy Conference (ENERGYCON), may 2014.

[2] RishaDastagir, Mariam Asif,”Power quality improvement using a DVR,” IJRDET, vol 2, issue 5, may 2014.

[3] Aman Ganesh, Rathna Dahiya and G K Singh, ”Development of Simple Technique for STATCOM for Voltage Regulation and Power Quality Improvement,” IEEE International Conference on Power Electronics, Drives and Energy Systems (PEDES), Dec 2016. PQI devices Voltage Sag/swell Harmonic Compensatio n Selective harmonic compensatio n PF correctio n Load balancin g Loss reductio n P compensatio n Q Compensatio n Passive Filters Hybrid filters Custom Power devices Power converters ESS Electrical Spring DGs 174 International Journal for Modern Trends in Science and Technology.

[4] Ankita Mishra, Arti Bhandakkar,” Power Quality Improvement of Distribution System by optimal Location and Size of DGs Using Particle Swarm Optimization,” IJSRET, ISSN 22278-0882,vol 3, issue 1,Apr 2014.

[5] G. C. Pyo , H. W. Kang and S. I. Moon,” A New Operation Method for Grid-Connected PV System Considering Voltage Regulation in Distribution System,” IEEE Power and Energy Society General Meeting - Conversion and Delivery of Electrical Energy in the 21st Century, ISSN:1932-5517, July 2008.

[6] J. Krata, T. K. Saha, “Real-Time Coordinated Voltage Support with Battery Energy Storage in a Distribution Grid Equipped with Medium-Scale PV Generation,” IEEE Transactions on Smart Grid, ISSN: 1949-3053, April 2018.

[7] Ibrahim Ahmad, GhaethFandi and Zdeněk Müller “Improvement of voltage profile and mitigation of power losses in case of faults using DG units,” IEEE 19th International Scientific Conference on Electric Power Engineering (EPE), ISSN: 2376-5631,June 2018.

[8] AdelcM. Sharaf,Foad H. Gandoman,, “A Switched Hybrid Filter -DVS/Green Plug for Smart Grid Nonlinear Load,” IEEE International Conference on Smart Energy Grid Engineering (SEGE), 2015.

[9] T.Xu, P C Taylor, ”Voltage Control Techniques for Electrical Distribution Networks Including Distributed Generation,” 17th world congress proceedings IFAC, Seoul, Korea, July 2008.

[10] Gummadi Srinivasa Rao, Y.P. Obulesh , “Voltage Profile Improvement of Distribution System using Distributed Generating Units,” International Journal of Electrical and Computer Engineering (IJECE) Vol. 3, No. 3, pp. 337~374.

[11] Lasseter, R.H. et al., “The CERTS Microgrid Concept”, White Paper for Transmission Reliability Program, Office of Power Technologies, U.S. Department of Energy, 2002.

[12] AusGrid, Requirements for Connection of Embedded Generators, ES 11, 2011.

[13] Ayres, H.M. et al., “Method for determining the maximum allowable penetration level of distributed generation without steady-state voltage violations”, Generation, Transmission Distribution, IET, VOL. 4, NO. 4, 2010, pp. 495-508.

[14] Karimi-Zare, P. and Seifi, H., “Maximum allowable penetration level determination of a DG in a distribution network”, 2012 IEEE Internationa Energy Conference and Exhibition (ENERGYCON), 2012, pp. 355-360.

[15] Braun, M. et al., “Optimal reactive power supply in distribution networks: Technological and economic assessment for PV systems”, 24th Eur. Photovoltaic Solar Energy Conf., Hamburg, Germany, 2009.

[16] Davito, B., “The Smart Grid and the Promise of Demand-Side Management”, McKinsey and Company, 2010.

[17] Abraham, E. et al., “Reactive Power Interconnection Requirements for PV and Wind Plants: Recommendations to NERC”, SANDIA REPORT SAND2012-1098, 2012.

[18] The Institute of Electrical and Electronics Engineers, Inc.,“IEEE Standards 929-2000, Recommended Practice for Utility Interface of Photovoltaic Systems” .

[19] Biying, R. et al., “Analysis and design of an LCL filter for the threelevel grid-connected inverter”, 2012 7th International Power Electronics and Motion Control Conference (IPEMC), 2012, Vol. 3, pp. 2023-2027.

[20] Kennedy, J. and Ciufo, P. and Agalgaonkar, A., “Intelligent load management in Microgrids”, 2012 IEEE Power and Energy Society General Meeting, 2012, p.p 1-8.

[21] Ye Z. et al., “Study and Development of Anti-Islanding Control for GridConnected Inverters”, National Renewable Energy Laboratory, 2004.

[22] Ye Z. et al., “Grid-Connected Inverter Anti-Islanding Test Results for General Electric Inverter-Based Interconnection Technology”, National Renewable Energy Laboratory, 2005.