Journal of Engineering Sciences

Vol 13, Issue 06, June /2022

ISSN NO:0377-9254

Design and Implementation of IoT based Energy Management System with Data Acquisition

Vishnu Vradhan Reddy Cheppala, Mr D Raghunatha Rao, Mrs B Shereesha, Mr K Narasimhudu

PG Scholar, Associate Professor, Assistant Professor, Assistant Professor

DEPT OF ECE

SVR Engineering College ,Nandyal

Abstract: Energy saving is one of the main challenge in our day to day life. Energy saving can be done only when the energy consumed by the load is monitored. Once the load is monitored, suitable control methods can be adopted to operate the load in the optimized way to save energy. Even though there are lot of technologies and solutions available to effectively monitor, control and save energy consumption of load in a house or an industry, the Internet of Things (IoT) technology is proposed to monitor, control and minimize energy consumption of load. The proposal is to design and develop an Internet of Things (IoT) based Energy Management System in which the data is collected from smart energy meter using iot network and displayed on APP. The proposed system is suitable for data collection and control the load in the Internet of Things (IoT) environment.

Keywords: IoT, Energy Management System, Embedded system, IP

I. INTRODUCTION

An electricity meter, electric meter, electrical meter, or energy meter is a device that measures the amount of electric energy consumed by a residence, a business, or an electrically powered device. Electric utilities use electric meters installed at customers' premises to measure electric energy delivered to their customers for billing purposes. They are typically calibrated in billing units, the most common one being the kilowatt hour (kWh) [8]. They are usually read once each billing period. The most common unit of measurement on the electricity meter is the kilowatt hour (kWh) [8], which is equal to the amount of energy used by a load of one kilowatt over a period of one hour, or 3,600,000 joules. Some electricity companies use the SI mega joule instead. Demand is normally measured in watts, but averaged over a period, most often a quarter- or half-hour. Reactive power is measured in thousands of volt-ampere reactive-hours (kVarh)[8]. By convention, a “lagging” or inductive load, such as a motor, will have positive reactive power. A “leading”, or capacitive load, will have negative reactive power. Volt-amperes measures all power passed through a distribution network, including reactive and actual. This is equal to the product of root-mean-square volts and amperes. Electric utilities use electric meters installed at customers' premises to measure electric energy delvered to their customers for billing purposes. Electricity meters operate by continuously measuring the instantaneous voltage (volts) and current (amperes) to give energy used (in joules, kilowatt-hours etc.). Energy meters are classified as per principle and operation. Like Electromechanical meters, Electronic meters, automatic energy meter, digital meters etc.

In the present billing system the distribution companies are unable to keep track of the changing maximum demand of consumers. The consumer is facing problems like receiving due bills for bills that have already been paid as well as poor reliability of electricity supply and quality even if bills are paid regularly. The remedy for all these problems is to keep track of the consumers load on timely

basis, which will held to assure accurate billing, track maximum demand and to detect threshold value. These are all the features to be taken into account for designing an efficient energy billing system. The present project "IoT Based Smart Energy Meter" addresses the problems faced by both the consumers and the distribution companies. The paper mainly deals with smart energy meter, which utilizes the features of embedded systems i.e. combination of hardware and software in order to implement desired functionality. The paper discusses comparison of Arduino and other controllers, and the application of GSM and Wi-Fi modems to introduce 'Smart' concept. With the use of GSM modem the consumer as well as service provider will get the used energy reading with the respective amount, Consumers will even get notification in the form text through GSM when they are about to reach their threshold value, that they have set. Also with the help of Wi-Fi modem the consumer can monitor his consumed reading and can set the threshold value through webpage. This system enables the electricity department to read the meter readings monthly without a person visiting each house. This can be achieved by the use of Arduino unit that continuously monitor and records the energy meter reading in its permanent (non-volatile) memory location.This system continuously records the reading and the live meter reading can be displayed on webpage to the consumer on request. This system also can be used to disconnect the power supply of the house when needed.

II. LITERATURE REVIEW

A smart energy meter based prepaid electricity distributionsystem has been proposed by (Yadav, Sharma 2015). Itconsists of an energy meter, microcontroller board,GSM module, EEPROM, keypad and LCD display. Here,one has to purchase a scratch card of requires amount andenter its serial number into the system using keypad andLCD display.The authors (Hiware, Bhaskar, Bombale & Kumar2013) have been proposed a scheme where it consists ofwireless meter, server, PIC microcontroller, three 8 bit ports,one 6 bit and one three bit port so total 33 I/O lines, ADE7757, 8 KB of program memory and 368 data memory.The authors (Jubi, & john 2013) have been proposed a scheme where it consist of consumers hold creditand then use the electricity until the credit is exhausted. Ifthe available credit is exhausted then the electricity supply iscutoff by a relay.The authors (Islam, Mamun 2015) have been proposed a scheme it developed the EDU, where consist ofMicrocontroller Atmega32, Energy Metering IC ADE7755and LCD display is used to display the balance amount.This paper present the prepaid energy meter is techniquewhich is cost efficient and can reduce problem associatedwith billing and also reduces deployment of manpower fortaking meter readings (Deepakumar, Latha 2015). Theenergy meter consists of a microcontroller (ATmega 32,energy measuring chip (ADE7751) GSM module, MAX232,LCD display and a relay.

Prepaid Electricity Energy Meter is a good concept in which you can recharge its balance, like we do in our mobile phones. In this project we are building a automated system by using Arduino and GSM module**.** You can recharge the electricity balance through this system, just by sending a SMS. It can also disconnect the home power supply connection, if there is low or zero balance in the system. And this system will reads the energy meter readings and automatically send some updates to user's mobile phone like low balance alert, cut off alert, resume alert and recharge alert.

III. DESIGN OF HARDWARE

This chapter briefly explains about the hardware implementation of Smart energy meter. It discusses the circuit diagram of each module in detail. For implementing the health diagnosis system, there is a need of essential

components that are suitable and manipulate health problems. The components use generally includes **Arduino , IR, Energy meter, GSM.**

3.1Arduino Uno

The most common version of Arduino is the Arduino Uno. This board is what most people are talking about when they refer to an Arduino. The Uno is one of the more popular boards in the Arduino family and a great choice for beginners. There are different revisions of Arduino Uno, below detail is the most recent revision (Rev3 or R3).

The Arduino Uno is a microcontroller board based on the ATmega328. It has 14 digital input/output pins (of which 6 can be used as PWM outputs), 6 analog inputs, a 16 MHz ceramic resonator, a USB connection, a power jack, an ICSP header, and a reset button. It contains everything needed to support the microcontroller; simply connect it to a computer with a USB cable or power it with an AC-to-DC adapter or battery to get started.

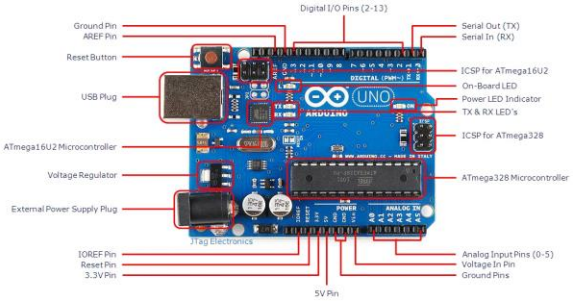

Fig: ArduinoUno R3 Board

3.2 LIGHT DEPENDENT RESISTOR

A photo resistor or light dependent resistor (LDR) is a resistor whose resistance decreases with increasing incident light intensity; in other words, it exhibits photoconductivity. It can also be referred to as a photoconductor or CdS device, from "cadmium sulfide," which is the material from which the device is made and that actually exhibits the variation in resistance with light level. Note that CdS is not a semiconductor in the usual sense of the word (not doped silicon).

3.3 ENERGY METER:

An electricity meter, electric meter, electrical meter, or energy meter is a device that measures the amount of electric energy consumed by a residence, a business, or an electrically powered device.

Electric utilities use electric meters installed at customers' premises for billing purposes. They are typically calibrated in billing units, the most common one being the kilowatt hour (*kWh*). They are usually read once each billing period.

When energy savings during certain periods are desired, some meters may measure demand, the maximum use of power in some interval. "Time of day" metering allows electric rates to be changed during a day, to record usage during peak high-cost periods and off-peak, lower-cost, periods. Also, in some areas meters have relays for demand response load shedding during peak load periods

3.4 BUZZER

Digital systems and microcontroller pins lack sufficient current to drive the circuits like relays, buzzer circuits etc. While these circuits require around 10milli amps to be operated, the microcontroller's pin can provide a maximum of 1-2milli amps current. For this reason, a driver such as a power transistor is placed in between the microcontroller and the buzzer circuit.

3.5 Alphanumeric LCD

Liquid Crystal Display also called as LCD is very helpful in providing user interface as well as for debugging purpose. The most commonly used Character based LCDs are based on Hitachi's HD44780 controller or other which are compatible with HD44580. The most commonly used LCDs found in the market today are 1 Line, 2 Line or 4 Line LCDs which have only 1 controller and support at most of 80 characters, whereas LCDs supporting more than 80 characters make use of 2 HD44780 controllers.

Pin Description

3.6 POWER SUPPLY:

The power supplies are designed to convert high voltage AC mains electricity to a suitable low voltage supply for electronic circuits and other devices. A power supply can by broken down into a series of blocks, each of which performs a particular function. A d.c power supply which maintains the output voltage constant irrespective of a.c mains fluctuations or load variations is known as "Regulated D.C Power Supply".

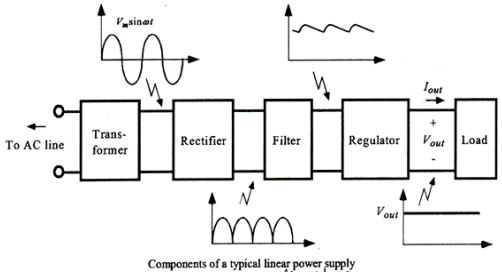

Fig:. Block Diagram of Power Supply

3.7 ESP8266 WIFI

The **ESP8266** is a low-cost Wi-Fi microchip with full TCP/IP stack and microcontroller capability produced by Shanghai-based Chinese manufacturer, Espressif Systems.[1]

The chip first came to the attention of western makers in August 2014 with the **ESP-01** module, made by a third-party manufacturer, Ai-Thinker. This small module allows microcontrollers to connect to a Wi-Fi network and make simple TCP/IP connections using Hayes-style commands. However, at the time there was almost no English-language documentation on the chip and the commands it accepted.[2] The very low price and the fact that there were very few external components on the module which suggested that it could eventually be very inexpensive in volume, attracted many hackers to explore the module, chip, and the software on it, as well as to translate the Chinese documentation.[3]

The **ESP8285** is an ESP8266 with 1 MiB of built-in flash, allowing for single-chip devices capable of connecting to Wi-Fi.[4]

The successor to these microcontroller chips is the ESP32.

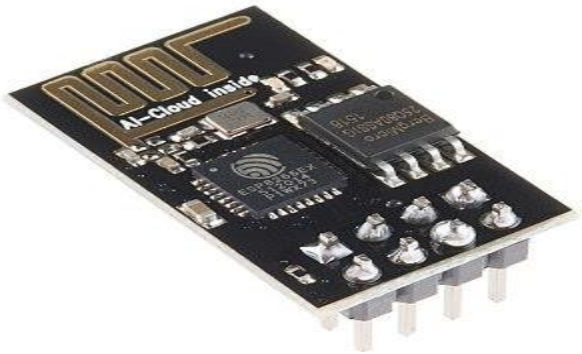

3.8 RELAY

The following schematic shows the basic circuit. A relay is an electrically operated switch. When you turn it on, it switches on way. When it is off, it switches the other way. You can use a relay to switch on and off a high current device.A relay has an electromagnet, called a coil, and a lightweight switch inside it. When you energize the coil, a piece of the switch is attracted by the coil's magnetic field, which switches the switch on or off.

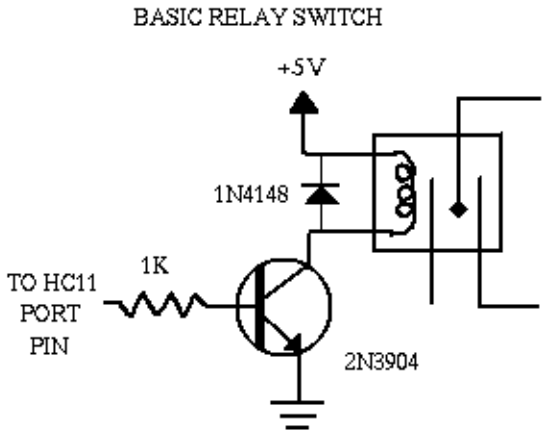

IV. PROJECT DESCRIPTION

This chapter deals with working and circuits of "**Smart energy meter using Arduino** ". It can be simply understood by its block diagram &circuit diagram.

BLOCK DIAGRAM:

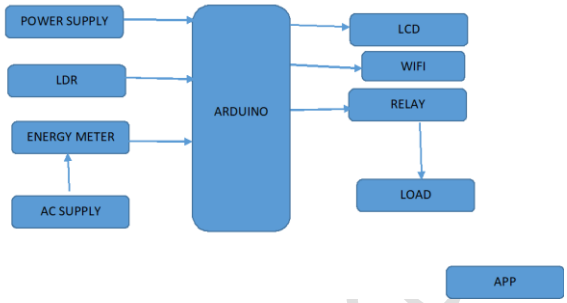

Fig: block diagram

WORKING:

When the various appliances of the household consume energy the energy meter reads the reading continuously and this consumed load can be seen on meter. We can see that the LED on meter continuously• blinks which counts the meter reading. Based on The blinking, the units are counted. Normally,• 3200 blinks is one unit. In our project we are trying to develop, a system• in which Arduino Uno act as main controller, which continuously monitor energy meter. As per the blinking of LED on energy meter the• Arduino will measure the unit consumption. The measured reading with the calculation of• the cost will be continuously displayed on web page that we have designed. Threshold value can be set on webpage with the• help of Wi-Fi, as per the consumer's requirement. When the consumers reading will be near about to the set threshold value it will send a notification value to the consumer. This threshold value notification will increase• the awareness amongst the consumer about the energy. When the consumer gets the notification he can• visit the webpage and change the threshold value. If the consumer is not aware with the threshold• notification, then the meter will automatically get off. Then the consumer has to visit the webpage again and increment the threshold value. By the

incrementation, the meter will automatically get ON. Finally the overall monthly bill with cost will be• sent to customer as well as service provider in the form of text at first day of every month.

V. CONCLUSION

An attempt has been made to make a practical model of 'IoT Based Smart Energy Meter.' The propagated model is used to calculate the energy consumption of the household, and even make the energy unit reading to be handy. Hence it reduces the wastage of energy and bring awareness among all. Even it will deduct the manual intervention.

REFERENCES

[1] Himshekhar Das, L.C.Saikia, "GSM Enabled Smart Energy Meter and Automation of Home Appliances", PP-978-1- 4678-6503-1, 2015 IEEE.

[2] Ofoegbu Osita Edward, "An Energy Meter Reader with Load Control Capacity and Secure Switching Using a Password Based Relay Circuit", PP-978-1-4799-8311-7, ' Annual Global Online Conference on Information and Computer Technology', IEEE 2014.

[3] Yingying Cheng, Huaxiao Yang, Ji Xiao, Xingzhe Hou, "Running State Evaluation Of Electric Energy Meter", PP978-1-4799-4565-8, 'Workshop on Electronics, Computer and Applications', IEEE 2014.

[4] Sahana M N, Anjana S, Ankith S,K Natarajan, K R Shobha, "Home energy management leveraging open IoT protocol stack ", PP- 978-1-4673-6670-0, 'Recent Advances in Intelligent Computational Systems (RAICS)', IEEE 2015.

[5] Luigi Martirano,Matteo Manganelli,Danilo Sbordone,''Design and classification of smart metering systems for the energy diagnosis of buildings'' IEEE 2015.

[6] J. Widmer, Landis," Billing metering using sampled values according lEe 61850-9-2 for substations",IEEE 2014.

[7] Cheng Pang,Valierry Vyatkin,Yinbai Deng, Majidi Sorouri, "Virtual smart metering in automation and simulation of energy efficient lightning system" IEEE 2013.

[8] Amit Bhimte, Rohit K.Mathew, Kumaravel S, "Development of smart energy meter in labview for power distribution systems", "IEEE INDICON 2015 1570186881", 2015.

[9] H. Arasteh, V. Hosseinnezhad, V.Loia, A.Tommasetti, O.Troisi, M.Shafie Khan, P.Siano, "IoT Based Smart Cities: A survey"IEEE 978-1-5090-2320-2/1631.00,2016.

[10] Clement N. NYIRENDRE, Irvine NYANDOWE, Linda SHITUMBAPO, "A comparison of the collection tree protocol (CTP) and AODV routing prot