Journal of Engineering Sciences

Vol 13, Issue 06, June /2022

ISSN NO:0377-9254

IOT Technology based stroller for Handicapped people

Suresh Marella Kammari, Mr.S.Mohan Das, Mrs D Anuradha, Mr S Sreenivasulu
PG Scholar, Associate Professor, Assistant Professor, Assistant Professor
DEPT OF ECE
SVR Engineering College ,Nandyal

Abstract: When it comes to old age, it becomes necessary to monitor our old ones for their health and safety. Due to weakness and weak joints they have a great risk of falling down. Now it is important to know if an old age person has fallen so that he/she can be helped on time. Also people on wheelchair need to be checked for fall detection. For this purpose we propose a smart fall detection system. The system uses accelerometer and gyro sensor to detect person movements, It can be mounted on persons hand or wheelchair for detection. The sensor is connected to a microcontroller in order to constantly transmit the acceleration data. Now the system keeps monitoring for fall detection and abrupt movement changes in person. A sudden abrupt change with jerk in the system is treated as a fall. Now in case the person did not fall and alarm was false, the system allows to snooze the alert if person presses snooze button in 5 seconds. If person does not press the snooze, system detects person has fallen and automatically triggers alert through Wi-Fi connection to alert the loved ones of the person about the situation instantly.

I.INTRODUCTION

In a very simple language, a wheelchair is a machine with wheels enabling easy movement, which empower a physically disabled person to move around with less dependency on others. People have disabilities with their hands, foots, lower extremities which puts a limit to perform regular task in their daily life. Still these wheelchairs have not satisfied the needs of the disabled people. It is therefore crucial that problems are understood in detailed and accordingly sensors should be equipped, hence this project is a result of the needs and includes development of a multifunctional chair.

Since people suffering from disabilities cannot afford to move, smart devices enable them to gain access to healthcare systems. A possible solution to monitor the patient's health status is by developing a health monitoring system. The objective of the present work is to develop an inexpensive smart wheel chair by integrating a microcontroller based health monitoring system to a regular wheel chair, to detect any cardiovascular abnormality using heart rate and breath rate and alert designated cell phone users by sending the alert signal over the cellular network.

IOT: The evolution of multiple technologies has led to the definition of the Internet of Things as an extension of Internet connectivity into physical devices and everyday objects. The technologies such as traditional fields of embedded systems wireless sensor networks, control systems and automation including building and home automation enable the Internet of Things. Web enabled smart devices that are embedded with sensors, processors and hardware that collect; share and act upon data acquired from their environments form the IOT ecosystem. Although people can interact with these devices, most of them work without human intervention – for example, gaining access to data by giving them instructions. The protocols used for networking, connectivity and communication in the web enabled devices are dependent on the IoT applications deployed. Before the IoT came into picture, the patients were restricted to communicating with their doctors via visits and tele communications. The doctors were not able to maintain a track of the patient's health records and monitor them on a regular basis. Through IoT, remote monitoring in the healthcare sector is possible with the help of the IoT enabled devices, thereby empowering the doctors to deliver superlative care.By enabling constant tracking of health conditions, IOT has changed people's lives, especially elderly patients, by enabling constant tracking of health conditions. This in turn impacts the patient as well as the concerned family members. B. Embedded Systems: A computing system that is programmed and controlled by a real-time operating system to fulfil a function in an embedded environment is called an embedded system. The design of an embedded system is uniquely constructed to meet the requirements and specifications of the user. A computer board is incorporated and is associated with an input/output. The embedded operating system allows the application software to utilise the features to provide the required functionality. For example, a fire alarm that senses smoke is an embedded system. The hardware, the application software and the real-time operating system that provides the mechanism for the processor to run the process forms the three major components of an embedded system. The real-time operating system defines a set of rules for the execution of the application program. An embedded

system is therefore a microcontroller system driven by software that is reliable and controlled by a realtime control system.The main advantage of using the embedded systems is the enhanced performance that is available at a low cost with low power consumption that can be easily customized. However, the embedded systems require a larger time to market and expect a high development effort. The embedded systems have been adopted in the medical field and are used in many ways by the doctors. They can be used for preventative medicine by enabling the patients to treat themselves. Embedded systems have also led to enhanced prosthetics by providing the prosthetic technicians with advancements. With the Internet of Things, through an extended inter network, doctors can keep a track by remotely monitoring their patients. The smart technology-based embedded medical devices have made the users proactive about their personal health.

Utilization of ARDUINO is feasible to distinguish the hand signal development and finger discovery likewise conceivable on Raspberry Pi with its on board GPU module. By identifying the finger, it is feasible to move the wheelchair explicit way like forward, opposite, left, right bearing. By utilizing distinctive calculation finger location and following it is feasible to move the wheelchair according to the commands. Considering the finger client needs to take the action. This system depends on to identify fingers of hand based on the better identification you can make the move. framework will plan for wheelchair control. Development of wheelchair depends on the quantity of fingers will distinguish i.e. finger one is identify that will be appeared in the LED pointer at that point push the wheelchair ahead, turn around, left, right as per the program code will be perform on the ARDUINO on the Raspberry Pi board. This framework can play out the four or five wheelchair applications at the same time. This system is intended for the social application, for example, the disabled individual like paralyzed patients they can't move anyplace particularly intended for those people it can likewise be utilized in businesses for play out the four or five applications at the same time. Complete framework dependent on the hardware and programming with the utilization OF Arduino.

II.LITERATURE SURVEY

Most of the papers reviewed presents discussion on control of smart wheelchair in terms of driving and steering. Control of wheelchair using different techniques such as Brain waves, Tongue Driven Systems, Face Movement Control, Hand Gesture Control etc. is discussed. Very few papers discussed the possibilities of Health Monitoring System using various sensors that can be integrated into the wheel chair. The availability of inexpensive sensors and the lack of extensive work done in health monitoring smart wheel chairs provides a scope for research. The choice of a wheelchair is rather complicated and depends on many criteria, such as the user's pathology, morphology, his/her rate of evolution, his/her environment(at home, in the office, etc.). Accordingly, there is not a "model" wheelchair. Thus, the wheelchair is selected according with economic and technical criteria. The position of each force sensor is identified where one force sensor is positioned in each pressure zone. Temperature sensors are integrated following the same procedure of force sensors, where a temperature sensor is placed just in front of each pressure sensor [1]. Many research study show how smart wheelchair can be of maximum assistance to its user. Navigation methods are divided to three categories according to levels of assistance. The three main categories are: Shared control, semi-autonomous control and completely autonomous control [3]. In the research work carried by Sibai & Manap,[1] a survey of the different type of smart wheel chairs is available. They also discuss on the HMI- Joystick Steering, Head/Chin/ Tongue Movement, Gaze/Face Direction. The paper also contains discussion on Sip & Puff Technology, EEG (Brain Signals), Voice Input, Hand Gesture Control , Discussion on Navigation Methods & Devices, Discussion on Future work on Health Monitoring Add-Ons. Kim et al.,[2] discusses a Smart Wheel Chair with a Tongue Driven System(TDS) for people with severe disabilities. Purnomo et al.[3] discusses emerging technologies & recent development on Pervasive Biomedical Engineering.

III. DESIGN OF HARDWARE

This chapter briefly explains about the hardware implementation of Smart energy meter. It discusses the circuit diagram of each module in detail. For implementing the health diagnosis system, there is a need of essential components that are suitable and manipulate health problems.

3.1Arduino Uno

The most common version of Arduino is the Arduino Uno. This board is what most people are talking about when they refer to an Arduino. The Uno is one of the more popular boards in the Arduino family and a great choice for beginners. There are different revisions of Arduino Uno, below detail is the most recent revision (Rev3 or R3).

The Arduino Uno is a microcontroller board based on the ATmega328. It has 14 digital input/output pins (of which 6 can be used as PWM outputs), 6 analog inputs, a 16 MHz ceramic resonator, a USB connection, a power jack, an ICSP header, and a reset button. It contains everything needed to support the microcontroller; simply connect it to a computer with

a USB cable or power it with an AC-to-DC adapter or battery to get started.

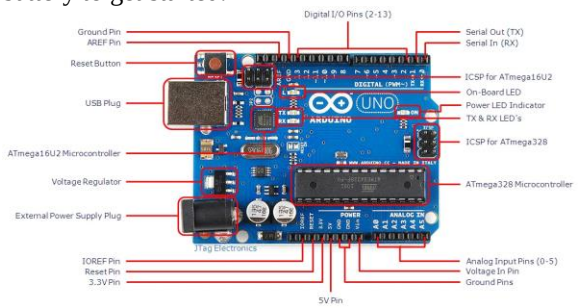

Fig: Arduino Uno R3 Board

3.2 THEORY OF DC MOTOR

The speed of a DC motor is directly proportional to the supply voltage, so if we reduce the supply voltage from 12 Volts to 6 Volts, the motor will run at half the speed. How can this be achieved when the battery is fixed at 12 Volts? The speed controller works by varying the average voltage sent to the motor. It could do this by simply adjusting the voltage sent to the motor, but this is quite inefficient to do. A better way is to switch the motor's supply on and off very quickly. If the switching is fast enough, the motor doesn't notice it, it only notices the average effect.

When you watch a film in the cinema, or the television, what you are actually seeing is a series of fixed pictures, which change rapidly enough that your eyes just see the average effect - movement. Your brain fills in the gaps to give an average effect.

Now imagine a light bulb with a switch. When you close the switch, the bulb goes on and is at full brightness, say 100 Watts. When you open the switch it goes off (0 Watts). Now if you close the switch for a fraction of a second, then open it for the same amount of time, the filament won't have time to cool down and heat up, and you will just get an average glow of 50 Watts. This is how lamp dimmers work, and the same principle is used by speed controllers to drive a motor. When the switch is closed, the motor sees 12 Volts, and when it is open it sees 0 Volts. If the switch is open for the same amount of time as it is closed, the motor will see an average of 6 Volts, and will run more slowly accordingly. The graph below shows the speed of a motor that is being turned on and off

3.3 MEMS:

MEMS are a process technology used to create tiny integrated devices or systems that combine mechanical and electrical components. They are fabricated using integrated circuit (IC) batch processing techniques and can range in size from a few micrometers to milli metres. These devices (or systems) have the ability to sense, control and actuate on the micro scale, and generate effects on the macro scale.

The interdisciplinary nature of MEMS utilizes design, engineering and manufacturing expertise from a wide and diverse range of technical areas including integrated circuitfabrication technology, mechanical engineering, materials science, electrical engineering,chemistry and chemical engineering, as well as fluid engineering, optics, instrumentation andpackaging. The complexity of MEMS is also shown in the extensive range of markets andapplications that incorporate MEMS devices. MEMS can be found in systems ranging acrossautomotive, medical, electronic, communication and defence applications. Current MEMSdevices include accelerometers for airbag sensors, inkjet printer heads, computer disk driveread/write heads, projection display chips, blood pressure sensors, optical switches,microvalves, biosensors and many other products that are all manufactured and shipped inhigh commercial volumes.

MEMS has been identified as one of the most promising technologies for the 21st Century and has the potential to revolutionize both industrial and consumer products by combining siliconbased microelectronics with micromachining technology. Its techniques and microsystembased devices have the potential to dramatically affect of all of our lives and the way we live.

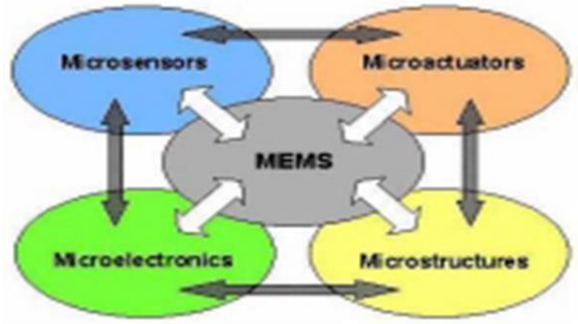

3.4 BUZZER

Digital systems and microcontroller pins lack sufficient current to drive the circuits like relays, buzzer circuits etc. While these circuits require around 10milli amps to be operated, the microcontroller's pin can provide a maximum of 1-2milli amps current. For this reason, a driver such as a power transistor is placed in between the microcontroller and the buzzer circuit.

3.5 Alphanumeric LCD

Liquid Crystal Display also called as LCD is very helpful in providing user interface as well as for debugging purpose. The most commonly used

Character based LCDs are based on Hitachi's HD44780 controller or other which are compatible with HD44580. The most commonly used LCDs found in the market today are 1 Line, 2 Line or 4 Line LCDs which have only 1 controller and support at most of 80 characters, whereas LCDs supporting more than 80 characters make use of 2 HD44780 controllers.

Pin Description

3.6 POWER SUPPLY:

The power supplies are designed to convert high voltage AC mains electricity to a suitable low voltage supply for electronic circuits and other devices. A power supply can by broken down into a series of blocks, each of which performs a particular function. A d.c power supply which maintains the output voltage constant irrespective of a.c mains fluctuations or load variations is known as "Regulated D.C Power Supply".

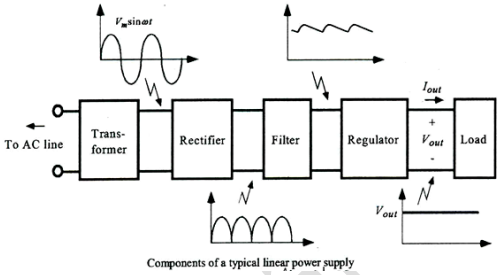

Fig:. Block Diagram of Power Supply

3.7 ESP8266 WIFI

The **ESP8266** is a low-cost Wi-Fi microchip with full TCP/IP stack and microcontroller capability produced by Shanghai-based Chinese manufacturer, Espressif Systems.[1]

The chip first came to the attention of western makers in August 2014 with the **ESP-01** module, made by a third-party manufacturer, Ai-Thinker. This small module allows microcontrollers to connect to a Wi-Fi network and make simple TCP/IP connections using Hayes-style commands. However, at the time there was almost no English-language documentation on the chip and the commands it accepted.[2] The very low price and the fact that there were very few external components on the module which suggested that it could eventually be very inexpensive in volume, attracted many hackers to explore the module, chip, and the software on it, as well as to translate the Chinese documentation.[3]

The **ESP8285** is an ESP8266 with 1 MiB of built-in flash, allowing for single-chip devices capable of connecting to Wi-Fi.[4]

The successor to these microcontroller chips is the ESP32.

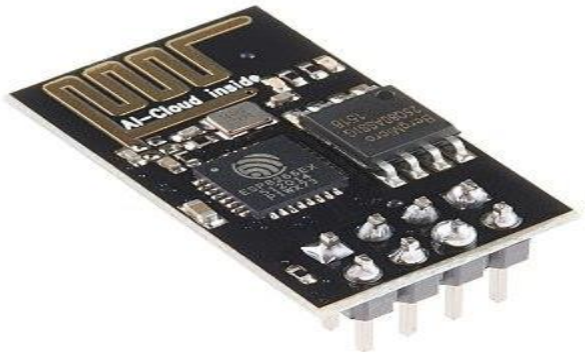

3.8 **Motion / Vibration Sensors**

Motion sensors are very similar in design to tilt switches; in fact, some tilt switches are used as motion sensors. The sensor will be in one condition (open or closed) at rest. When it is subjected to motion it will continually change state as long as it remains in motion. Some common applications include: anti-theft devices, man-down alarms to detect non motion, smart appliances to turn off power when not in use and portable equipment to do the same

IV.PROJECT DESCRIPTION

This chapter deals with working and circuits of "**IOT Technology based stroller for Handicapped people** ". It can be simply understood by its block diagram &circuit diagram.

4.1 BLOCK DIAGRAM:

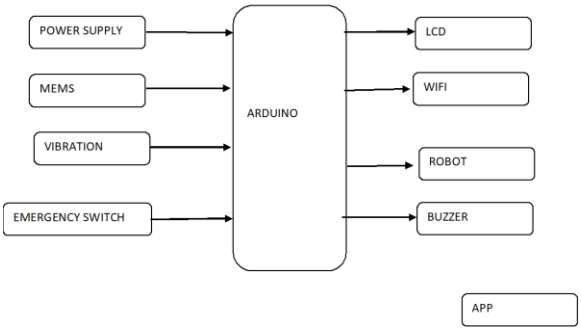

4.2 WORKING:

Due to weakness and weak joints previous individuals have a good risk of falling down. Currently it's necessary to understand if associate degree maturity person has fallen so he/she are often helped on time. Additionally individuals on chair got to be checked for fall detection. For this purpose we have a tendency to propose a sensible fall detection system. The system uses measuring instrument and gyro sensing element to discover person movements, it are often mounted on persons hand or chair for detection. The sensing element is connected to a microcontroller so as to perpetually transmit the acceleration knowledge. Currently the system keeps observation for fall detection and abrupt movement changes in the flesh. A sharp abrupt modification with jerk in the system is treated as a fall. Currently just in case the person failed to fall and alarm was false, the system permits to snooze the alert if person presses snooze button in five seconds. If person doesn't press the snooze, system detects person has fallen and mechanically triggers alert through Wi-Fi association to alert the favorite ones of the person concerning matters instantly.

DC engines are utilized to genuinely drive the application according to the necessity gave in programming. The dc engines work on 12V to drive a dc engine. we need a dc engine driver called L293D. This dc engine driver is fit for driving 4 dc engines all at once. To shield a dc engine from back emf produced by the dc engine while altering the course of turn. The dc engine driver has a interior assurance suit, we can likewise give back emf security suit by interfacing 4 diode setups across every dc engine.

These modules are utilized to in the framework to assist the client with packaging crisis, where in we convey the crisis circumstance to the family members of the client of the framework or emergency vehicle and so forth This is accomplished by sending the area boundaries to as a SMS here when the client provides the order as crisis using wifi, displayed on lcd and app.

A measuring instrument may be a device that measures the vibration of motion of a structure. The force caused by vibration or a modification in motion (acceleration) causes the mass to "squeeze" the electricity material that produces associate degree electrical charge that's proportional to the force exerted upon it.

4.3ADVANTAGES

1. Easy for the impaired to use. 2. Provides safe navigation 3. Little in size 4. Comfortable 5. Transportation of the chair is less complicated. 6. Versatile to use 7. Minimal Cost 8. Usage of Current is very less.

4.4FUTURE WORK

This system will be additional developed into Associate in Nursing intelligent system that works on machine intelligence to assist report with alternative varied medical conditions with the assistance of alternative sensors.

V. CONCLUSION

The design and implementation of a sensible chair for disabled individual's victimization Arduino and mems module for dominant the motion of a chair designed the look not solely cut back the manufacture value compared with gift market however conjointly can provide nice competitive with alternative sorts of electric chair. This project has several blessings like safety, comfort, energy saving, full automation etc. The technology is increased safely for users World Health Organization use chair, by preventing collision with walls, fastened objects, furnishings and people with the assistance of object device, so all the drawbacks of the assorted sorts of chair area unit overcome by this "smart wheelchair".

REFERENCES

1. Chaugule, A. IOT: Architecture, Applications and Challenges. (2019). Journal of Engineering Technologies and Innovative Research (JETIR), 6(2).
2. Shaheen, H., Himabindu, E., Sreenivasulu, T., Rangasamy, R. (2018). An IoT Based System to Detect a Person/Wheelchair Fall. International Journal of Engineering & Technology, 7(3.20).
3. Kokila, P., Sharmila, R., Sheril, P., Karthik, G.R., Ramkumar, M. Audio controlled wheelchair using ARDUINO. International Journal of Intellectual Advancements and Research in Engineering Computations. 6(1).
4. Joseph, C., Aswin, S., & Prasad, J. S. (2019, March). Voice and gesture controlled wheelchair. In 2019 3rd International Conference on Computing Methodologies and Communication (ICCMC) (pp. 29-34). IEEE.
5. Lee, Y., Kim, J., Son, M., & Lee, M. (2007, August). Implementation of accelerometer sensor module and fall detection monitoring system based

on wireless sensor network. In 2007 29th Annual International Conference of the IEEE Engineering in Medicine and Biology Society (pp. 2315-2318). IEEE.
6. Mohd Aizam, M. A., Mohamad Hadis, N. S., & Abdullah, S. (2020). IoT-based smart wheelchair system for physically impaired person. ESTEEM Academic Journal, 16, 59- 73.