Journal of Engineering Sciences

Vol 13, Issue 06, June /2022

ISSN NO:0377-9254

DESIGN OF GAS AND FIRE DETECTOR AND ALARM SYSTEM WITH WATER SPRINKLE

Mr. K. GIRI BABU, M.RAHUL PRAVEEN, G.SRIHARI, B.BALRAJ GOUD, B.SANDEEP KUMAR

DEPT OF ECE

J.B. Institute of Engineering and Technology, Hyderabad

ABSTRACT:

This work is to design and implement a Fire and Gas Detection System with water sprinkler using SMS Feedback. This system makes use of a microcontroller along with sensing circuit which will detect gas leakage and fire and with the help of an alarm system the system gives alert about fire or gas leakage and with the installation of a GSM modem SMS can be sent to notify the user if there is fire or gas leakage and if the fire occurs the water sprinkler sprinkles water on the affected area to reduce the effect of the fire. A Liquid Crystal Display (LCD) displays the status of the

Key words: Gas Detection, sprinkler, Liquid Crystal Display (LCD)

I. INTRODUCTION

Fire and Gas systems (FGS) are important tools for safeguarding our residence home and other facilities that handle flammable and toxic materials. All such facilities have inherent fire risk that cannot be fully mitigated with instrumented protective function, in some cases these facilities require the installation of fire and gas systems to mitigate these hazards. Proper design of fire and gas systems begins with the selection of a performance target for functions employed by the fire and gas system. Performance of a fire and gas System is primarily characterized by the system's ability to detect hazards (detector coverage) and the system's ability to mitigate hazards. Determination of the necessary coverage, mitigation effectiveness requirements for a FGS is an exercise in risk analysis. A well designed fire and gas system is intended to detect and in some cases automatically mitigate fire, combustible gas and toxic gas hazards. Proper placement of detectors is critical in the design of a fire and gas system to ensure that coverage is adequate to detect hazards at their incipient stage, in order to avert escalation. The gas detection system can detect a leakage of combustible or toxic gas and take action to mitigate or prevent it from escalating into a fire or explosion. If a fire should result, systems can be attached to extinguish the fire and protect other areas from the actions of the fire. The same system, usually with different detectors and principles, can be used to detect toxic gases, give warning to personnel and provide the possibility of taking automatic actions. Fires in process plants may be either like any other industrial fires, for example electrical fires in utility or an ignited leak of a product from the process. Some facilities use separate gas and fire detection systems. Generally, the fire detection system and gas detection system is combined into one fire and gas system. A separation that may be made is to have one fire and gas system for the 'process' areas and another sub-system for the utility or office/accommodation areas. Systems can be single, duplicated or triplicate. Redundant systems are not new. Systems in the early 1980's were being delivered with dual, diversely located controllers, dual detectors, and dual control outputs. Kenexis,(2014).

Now a days automatic fire detection and control is becoming very essential to reduce the fire in the building and industry. Monitoring commercial and residential areas all-round is an effective method to reduce personal and property losses due to fire disasters. Automatic fire alarm system provides real time surveillance, monitoring and automatic alarm. A key aspect of fire protection is to identify a developing fire emergency in a timely manner, and to alert the building's occupants and fire emergency organizations. This is the role of fire detection and alarm systems. Generally fire detectors are designed [1] to respond at an early stage to one more of the four major characteristics of combustion such as heat, smoke, flame or gas. No single type of detector is suitable for all types of premises or fires. Heat detectors respond to the temperature rise associated with a fire and smoke detector respond to the smoke

or gas generated due to fire. Large numbers of small fire detectors should report their information to the control center of a building or a block. But the cost of wiring is very high in traditional wired fire alarm systems. This paper is entitled automatic smoke detector and fire alarm. This proposed work is to provide best security from fire asserts by using new technology. A smoke detector is strictly a sensing device, which senses the smoke and sends a signal to a buildings fire alarm system to activate an audible and sometimes visual warning or alarm and simultaneously to switch on the motor to pump the water to spray on fire automatically. It operates by using light dependent resistor which can be used as a sensor to create a smoke detection alarm systems and can be used in industries, residential, universities, offices and different companies to protect the goods, security ware houses etc. A fire alarm circuit is very useful for security reasons. Equipment specifically manufactured for these purposes are selected and standardized installation methods are anticipated during the design. The key advantage of smoke detectors is its ability to identify a fire while it is still in its incipient. As such, they provide added opportunity for emergency personnel to respond and control the developing fire before severe damage occurs. They are usually the preferred detection method in life safety and high content value applications.

II.LITERATURE REVIEW

Lei Zhang et al. [2] have explained an automatic fire alarm system based on wireless sensor networks, which is designed for high-rise buildings. In order to provide early extinguishing of a fire disaster, large numbers of detectors which periodically measure smoke concentration or temperature are deployed in buildings. Those scattered detectors report their monitoring information to the surveillance center via the self-organizing hierarchical wireless sensor networks.

Noora Al Hadhrami et al. [3] have dealt with the concept of developing a software and a hardware system for industries to provide security in case of fire and smoke detection. During normal condition, the smoke detector provides no signal to the control system. In case of smoke or fire detection, the detector provide high signal to the microcontroller unit in order to activate its output ports such as alarm circuit, water pump, system display and an SMS unit, will run immediately to give an alarm and stop the smoke or fire and send an SMS to the property owner.

Hussam Elbehiery et al. [4] have suggested the technique in fire alarm system used the addressable detectors units besides using the wireless connection between the detector in zones as a slave units and the main control unit as the master unit. The system shall include a control panel, alarm initiating devices, notification appliances, and the accessory equipment necessary for a complete functioning fire alarm system. In the wireless fire alarm, individual units are powered by primary & secondary batteries for the communication.

III. DESIGN OF HARDWARE

This chapter briefly explains about the hardware implementation of fire and gas detection using GSM. It discusses the circuit diagram of each module in detail

3.1 ARDUINO:

The most common version of Arduino is the Arduino Uno. This board is what most people are talking about when they refer to an Arduino. The Uno is one of the more popular boards in the Arduino family and a great choice for beginners. There are different revisions of Arduino Uno, below detail is the most recent revision (Rev3 or R3).

The Arduino Uno is a microcontroller board based on the ATmega328. It has 14 digital input/output pins (of which 6 can be used as PWM outputs), 6 analog inputs, a 16 MHz ceramic resonator, a USB connection, a power jack, an ICSP header, and a reset button. It contains everything needed to support the microcontroller; simply connect it to a computer with a USB cable or power it with an AC-to-DC adapter or battery to get started.

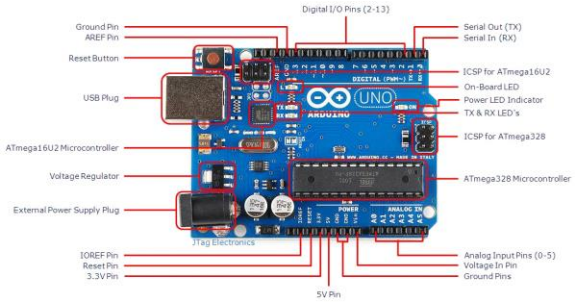

fig 1: ArduinoUno R3 Board

POWER SUPPLY:

The power supplies are designed to convert high voltage AC mains electricity to a suitable low voltage supply for electronic circuits and other devices. A power supply can by broken down into a series of blocks, each of which performs a particular function. A d.c power supply which maintains the output voltage constant irrespective of a.c mains fluctuations or load variations is known as "Regulated D.C Power Supply".

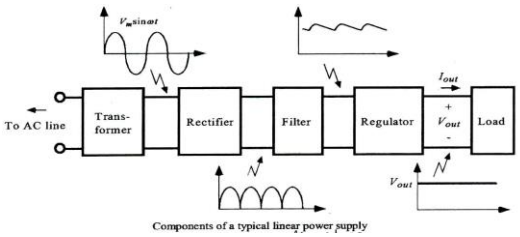

Fig:2. Block Diagram of Power Supply

3.2 LCD:

A model described here is for its low price and great possibilities most frequently used in practice. It is based on the HD44780 microcontroller (Hitachi) and can display messages in two lines with 16 characters each. It displays all the alphabets, Greek letters, punctuation marks, mathematical symbols etc. In addition, it is possible to display symbols that user makes up on its own. Automatic shifting message on display (shift left and right), appearance of the pointer, backlight etc. are considered as useful characteristics.

Fig3: LCD

3.3BUZZER:

Digital systems and microcontroller pins lack sufficient current to drive the circuits like relays, buzzer circuits etc. While these circuits require around 10milli amps to be operated, the microcontroller's pin can provide a maximum of 1-2milli amps current. For this reason, a driver such as a power transistor is placed in between the microcontroller and the buzzer circuit.

3.4 RELAY

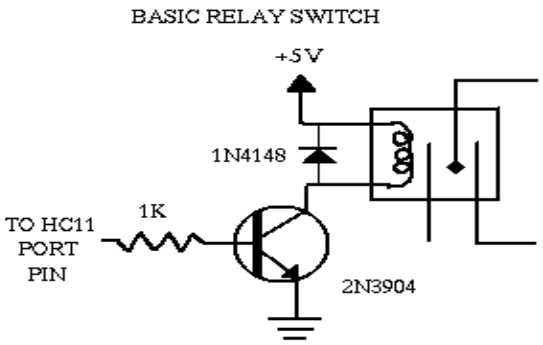

The following schematic shows the basic circuit.
A relay is an electrically operated switch. When you turn it on, it switches on way. When it is off, it switches the other way. You can use a relay to switch on and off a high current device.A relay has an electromagnet, called a coil, and a lightweight switch inside it. When you energize the coil, a piece of the switch is attracted by the coil's magnetic field, which switches the switch on or off.

3.5GAS DETECTOR:

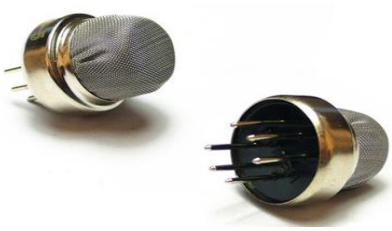

MQ2 flammable gas and smoke sensor detects the concentrations of combustible gas in the air and outputs its reading as an analog voltage. The sensor can measure concentrations of flammable gas of 300 to 10,000 ppm. The sensor can operate at temperatures from -20 to 50°C and consumes less than 150 mA at 5 V.

Connecting five volts across the heating (H) pins keeps the sensor hot enough to function correctly. Connecting five volts at either the A or B pins causes the sensor to emit an analog voltage on the other pins. A resistive load between the output pins and ground sets the sensitivity of the detector. Please note that the picture in the datasheet for the top configuration is wrong. Both configurations have the same pin out consistent with the bottom

configuration. The resistive load should be calibrated for your particular application using the equations in the datasheet, but a good starting value for the resistor is 20 kΩ.

3.6FLAME SENSOR

A **flame detector** is a sensor designed to detect and respond to the presence of a flame or fire, allowing **flame detection**. Responses to a detected flame depend on the installation, but can include sounding an alarm, deactivating a fuel line (such as a propane or a natural gas line), and activating a fire suppression system. When used in applications such as industrial furnaces, their role is to provide confirmation that the furnace is working properly; in these cases they take no direct action beyond notifying the operator or control system. A flame detector can often respond faster and more accurately than a smoke or heat detector due to the mechanisms it uses to detect the flame.

Optical flame detectors

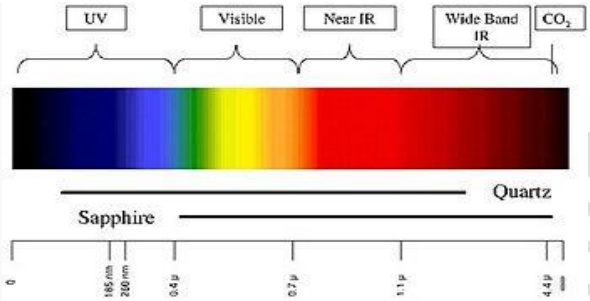

Flame detector type regions

3.7GSM

The **Global System for Mobile Communications** (**GSM**) is a standard developed by the European Telecommunications Standards Institute(ETSI) to describe the protocols for second-generation (2G) digital cellular networks used by mobile devices such as mobile phones and tablets. It was first deployed in Finland in December 1991.[2]By the mid-2010s, it became a global standard for mobile communications achieving over 90% market share, and operating in over 193 countries and territories.[3]

2G networks developed as a replacement for first generation (1G) analog cellular networks. The GSM standard originally described a digital, circuit-switched network optimized for full duplex voice telephony. This expanded over time to include data communications, first by circuit-switched transport, then by packet data transport via General Packet Radio Service (GPRS), and Enhanced Data Rates for GSM Evolution(EDGE).

Subsequently, the 3GPP developed third-generation (3G) UMTS standards, followed by fourth-generation (4G) LTE Advanced standards, which do not form part of the ETSI GSM standard.

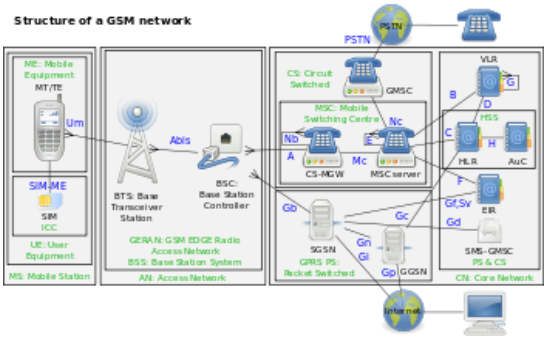

IV.PROJECT DESCRIPTION

This chapter deals with working and circuits of "GAS LEAKAGE ALERT SYSTEM". It can be simply understood by its block diagram &circuit diagram.

4.1 BLOCK DIAGRAM:

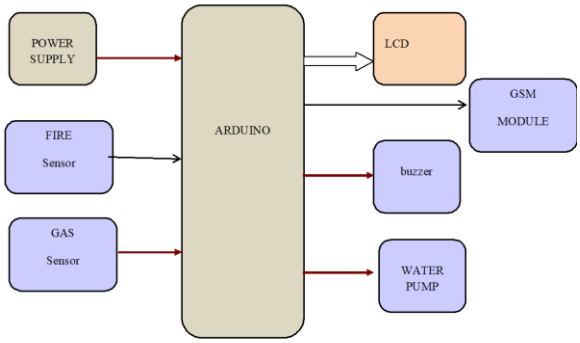

Fig 4:block diagram

4.2WORKING

The Fire and Gas Detection system makes use of two sensors the MQ-2 and the LM35; the MQ-2 is used to detect the presence of Liquefied Petroleum Gas (LPG) and the LM35 is used to detect the temperature of the surrounding and as well detect the presence of flame in the surrounding and the signal gotten from the two sensors are sent to the microcontroller and the status of the system is

displayed on an LCD. With the help of the GSM module, the system sends SMS to the user's phone number telling the user the status of the environment whether a gas is detected or flame is detected in the surrounding.

4.3.ADVANTAGES

A. In Prevention of accidents inside the gate B. For Reliable machine which operates without gatekeeper.

4.4 APPLICATIONS

A. It can be also used in banks and also in car parking. B. This is used in security areas like military and also in own apartments C. It can also be used in schools, colleges etc.

V.EXPERIMENTAL RESULTS

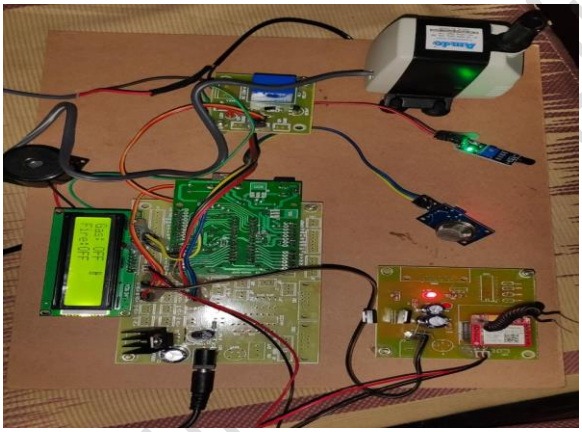

VI.CONCLUSION

A fire and gas hazard control has been designed, implemented and found working. This system has solved the problem caused by gas leakage in our surrounding which lead to fire outbreak that has caused the death of its victims. This system has been designed to carry out the detection and notify the presence of a Liquefied Petroleum Gas (LPG) in our surroundings. It also detect and notify the presence of fire in the environment then fight the fire outbreak itself using fire extinguisher and the water sprinkling system. The construction was made such that maintenance and repairs are done easily incase the system breaks down or if a fault occurs. This system can be applied in residential places, offices and hotels. With this system safety is assured.

REFERENCES

[1] A.K. Singh, and Harshit Singh, "Forest Fire Detection through Wireless Sensor Network using Type-2 Fuzzy System", International Journal of Computer Applications," vol 52– No.9, pp. 19-23, August (2012.)

[2] Al-Abbass Y. Al-Habashneh, Mohamed H. Ahmed, and Taher Husain, "Adaptive MAC Protocols for Forest Fire Detection Using Wireless Sensor Networks ," in proceeding of IEEE electrical and communication system engineering confrence', (2009),pp.329-333.

[3] Apeh S.T, Erameh K.B2 and Iruansi U. (2014) "Design and Development of Kitchen Gas Leakage Detection and Automatic Gas Shut off System", Journal of Emerging Trends in Engineering and Applied Sciences (JETEAS).Scholarlink Research Institute Journals, pp. 222-228.

[4] `ArnoldoDíaz-Ramíreza, Luis A. Tafoyaa, Jorge A. Atempa, and Pedro Mejía-Alvarezb, "Wireless Sensor Networks and Fusion Information Methods for Forest Fire Detection," in Science direct on Electronics Engineering and Computer Science ', 2012, pp.69-79.

[5] ArunKumar.G.A. Rajasekhar.K., Satyanarayana.B.V.V., and SuryanarayanaMurthy.K, "Implementation of Real time Detection of Gas leakage in Industries usingARM7 &Zigbee", International Journal of Engineering Research & Technology, Vol .1, Issue 7, pp 1-4, Sep 2012.

[6] Asche F, Osmundensen P, Sandmark M.(2012).The Uk market for natural gas, oil and electricity. The energy journal, pp. 27- 40.

[7] Ashish S, Ratnesh P, Rajeev K, Rahul V (2013)."GSM Based Gas Leakage Detection System" International Journal Of Technical Research And Application. Pp.42-45.

[8] ÇağdaşDöner, GökhanŞimşek, Kasım Sienna Yıldırım, and AylinKantarc, "Forest Fire Detection with Wireless Sensor Networks,"in academia Computer Engineering Department, Ege University', 2010, pp.107-109.

[9] GengJuntato, Zhou Xiaotao, Zhang Bingjie, "An Atmosphere Environment Monitor System Based on

Wireless Sensor Network", Journal of Xihua University, Natural Science, Vol. 26, no.4, pp. 44-
[10] Hartley PR, Medlock KB, Rosthal JE. (2012). "The Relationship of Natural Gas to Oil Prices.The Energy Journal".Pp.47-66