Journal of Engineering Sciences
Vol 13, Issue 06, June/2022
ISSN NO:0377-9254

ANN CONTROLLED GRID CONNECTED HYBRID PVAND FC DISTRIBUTED GENERATION SYSTEM

[1]Mr. E.CHINNA SUNKAIAH, [2]S.SHAHIN SULTHANA, [3]M.LAVANYA, [4]S.NEHA SULTHANA, [5]D.S.SANGEETHA SWARAJ, [6]M.SHAHANAZ ANJUM
[1]Asst.Professor, Department of EEE, GIT, Gooty.
[2,3,4,5,6]Electrical and Electronics Engineering, GATES Institute Of Technology, Gooty, Anantapur - 515401
[1]chinnasunkaiah123@gmail.com, [2]shahinsulthana2001@gmail.com, [3]mlavanyanaidu213@gmail.com, [4]nehasulthana022@gmail.com, [5]swarajeee7@gmail.com, [6]shahanaz2949@gmail.com

Abstract— This Thesis describes the power control strategies of a neural network controlled grid connected hybrid photo voltaic and proton exchange membrane fuel cell distributed generation system with battery as energy storage device. The primary source of energy for the hybrid distributed generation system is from photovoltaic cell and proton exchange membrane fuel cell and the battery acts as a complementary source of energy. The hybrid distributed generation system is connected to a grid through power electronic interfacing devices. A Matlab/Simulink model is developed for the grid connected hybrid distributed generation system, neural network controlled power electronic DC/DC and DC/AC converters to control the flow of power on both sides. Simulation results illustrate the performance of the hybrid system following the load demand and operating the system near unity power factor.

Key Words – Fuel cell, Battery, Distributed generation, Photovoltaic cell, Neural networks control.

I. INTRODUCTION

The penetration level of green and renewable energy sources/distributed generation units are expected to grow in the near future as there is a probability of rundown conventional fuels for power generation. The distributed generation is classified as renewable and non-renewable. The distributed generation sources such as Fuel cells, Wind and Solar energy are increasing daily due to increase in demand for electrical power. These energy sources are environmental friendly, reduces transmission and distribution losses, peak load shaving, can be used as backup sources and etc. Fuel cell is a promising device as it is efficient, modular and can be placed at any site for improving system efficiency but it has slow start-up response. Solar energy is an important renewable energy source but the intermittent nature of this technology is a major issue. The availability of energy is driven by weather and cell temperature but not on the loads of the systems.

RENEWABLE ENERGY:

Renewable energy is energy which is generated from natural sources i.e. sun, wind, rain, tides and can be generated again and again as and when required. They are available in plenty and by far most the cleanest sources of energy available on this planet. For e.g.: Energy that we receive from the sun can be used to generate electricity. Similarly, energy from wind, geothermal, biomass from plants, tides can be used this form of energy to another form. Merits And Demerits of Using Renewable Energy are as follows:

MERITS:

1. The sun, wind, geothermal, ocean energy are available in the abundant quantity and free to use.
2. The non-renewable sources of energy that we are using are limited and are bound to expire one day.
3. Renewable sources have low carbon emissions, therefore they are considered as green and environment friendly.
4. Renewable helps in stimulating the economy and creating job opportunities. The money that is used to build these plants can provide jobs to thousands to lakes of people.
5. You don't have to rely on any third country for the supply of renewable sources as in case of non-renewable sources.
6. Renewable sources can cost less than consuming the local electrical supply. In the long run, the prices of electricity are expected to soar since they are based on the prices of crude oil, so renewable sources can cut your electricity bills. various tax incentives in the form of tax waivers, credit deductions are available for individuals and businesses who want to go green.

DEMERITS:

1. It is not easy to set up a plant as the initial costs are quite steep.
2. Solar energy can be used during the day time and not during night or rainy season.
3. Geothermal energy which can be used to generate electricity has side effects too. It can bring toxic chemicals beneath the earth surface onto the top and can create environmental changes.
4. Hydroelectric provide pure form of energy but building dams across the river which is quite expensive can affect natural flow and affect wildlife.
5. To use wind energy, you have to rely on strong winds therefore you have to choose suitable site to operate them. Also, they can affect bird population as they are quite high.

II. SYSTEM MODELLING

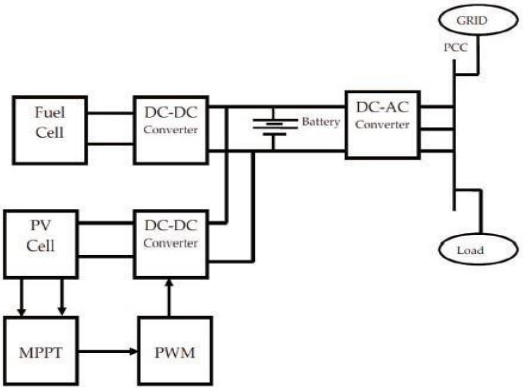

Fig-1 Block Diagram Of Grid Connected Hybrid System

The grid connected hybrid system consists of a PV/PEMFC/Battery hybrid source with the main grid connecting loads at the Point of Common Coupling (PCC) as shown in Figure.1. The PV/PEMFC/Battery and the dc–dc converters are connected on the common DC bus which is coupled at the dc side of a dc/ac inverter. *(i)Proton Exchange Membrane Fuel Cell Model* A fuel cell operates like a battery by converting the chemical energy into electrical energy, but it differs from a battery in that as long as the hydrogen and oxygen is supplied it will produce DC electricity continuously. Fuel cells play a vital role in distributed generation because of their advantages such as high efficiency, no pollutant gases and modular structure flexibility.

The fuel cell voltage is described by a relationship given below [2]

$$E = E_{Nernst} - V_{act} - V_{ohm} - V_{conc} \quad (1)$$

Where ENerst is the "thermodynamic potential" of Nerst, which represents the reversible (or open-circuit) voltage of the fuel cell The performance of the fuel cell is affected by many parameters and one important parameter is reactant utilization, Uf [6] and is given by equation (2)

$$U_f = 1 - \frac{q_{H2}^{out}}{q_{H2}^{in}} = \frac{q_{H2}^{r}}{q_{H2}^{in}} = 2K_r I \quad (2)$$

The Nernst's equation and ohm's law determine the average voltage magnitude of the fuel cell stack and is given by equation (3)

$$V_{fc} = N_0\left(E_0 + \frac{RT}{2F}\left(\ln\left(\frac{P_{H_2}P_{O_2}^{0.5}}{P_{H_2O}}\right)\right) - rI_{fc}\right) \quad (3)$$

Where

N0 is the number of fuel cells connected in series

E0 is the reaction free energy voltage

R is the universal gas constant

T is the temperature

If0 is the fuel cell stack current

PH2, PH2O, and PO2 are the partial pressures of hydrogen, water and oxygen respectively.

q represents the molar flow

Kr is the Constant

$$P_{H_2} = -\frac{1}{t_{H_2}}\left(P_{H_2} + \frac{1}{K_{H_2}}\left(q_{H_2}^{in} - 2K_r I_{fc}\right)\right) \quad (4)$$

$$P_{H_2O} = -\frac{1}{t_{H_2O}}\left(P_{H_2O} + \frac{2}{K_{H_2O}} K_r I_{fc}\right) \quad (5)$$

$$P_{O_2} = -\frac{1}{t_{O_2}}\left(P_{O_2} + \frac{1}{K_{O_2}}\left(q_{O_2}^{in} - K_r I_{fc}\right)\right) \quad (6)$$

PV Model :

The equivalent circuit is a one diode model of a solar cell which consists of a diode and a current source connected in parallel with a series resistance Rs. The current source produces the photocurrent Iph, which is directly proportional to solar irradiance G. The two key parameters often used to characterize a PV cell are it's short circuit current and its open circuit voltage which are provided by the manufacturer's data sheet.

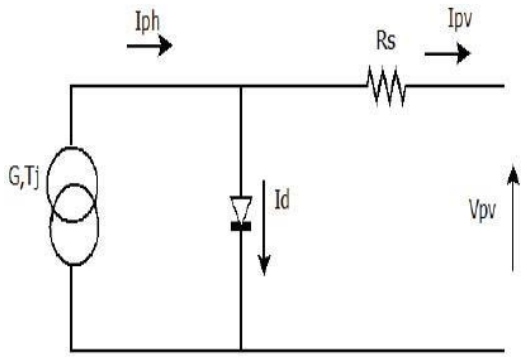

Fig.2. Equivalent Solar Cell Model With Rs

The mathematical model [3] of PV cell can be expressed as 3.4

$$I_{pv} = I_{Ph} - I_0\left[\exp q\left(\frac{V_{pv} + I_{pv}.R_s}{AKT}\right) - 1\right] \quad (7)$$

Since Photocurrent I_{Ph} is directly proportional to solar radiation G

$$I_{Ph}(G) = I_{sc}\frac{G}{G_{ref}} \quad (8)$$

The short-circuit current I_{SC} of solar cell depends linearly on cell temperature

$$I_{sc}(T_j) = I_{scs}\left[1 + \Delta I_{sc}(T_j - T_{jref}\right] \quad (9)$$

Thus, I_{Ph} depends on solar irradiance and cell temperature

$$I_{Ph}(G, T_j) = I_{scs}\frac{G}{G_{ref}}\left[1 + \Delta I_{sc}(T_j - T_{jref}\right] \quad (10)$$

I_0 also depends on solar irradiation and cell temperature and can be mathematically expressed as follows:

$$I_0(G, T_j) = \frac{I_{Ph}(G, T_j)}{e^{\left(\frac{V_{oc}(T_j)}{V_t(T_j)}\right)} - 1} \quad (11)$$

In the literature many MPPT techniques are available such as incremental conductance 3.5 (INC), constant voltage (CV), and perturbation and observation (P&O). The P&O method has been widely used because of its simple feedback structure and fewer measured parameters. The panel voltage is deliberately perturbed (increased or decreased) then the power is compared to the power obtained before to disturbance. Specifically, if the power panel is increased due to the disturbance, the following disturbance will be made in the same direction and if the power decreases, the new perturbation is made in the opposite direction. But the demerit with P & O is the output power is oscillating in nature. Because of this reason we use the Fuzzy MPPT technique to deliver the maximum power and to eliminate perturbations in the output power.

ANN MPPT Control :

The inputs to the ANN MPPT control can be measured or computed from the voltage and current of solar panel. The control rules are indicated in with Ppv and Vpv as inputs and Vpvref as the output.

Battery Modelling :

The battery is a device which stores energy in electrochemical form. Battery is used as energy storage device in wide range of applications like hybrid electric vehicles and hybrid power systems. In this paper, the battery energy storage is combined with hybrid PV/PEMFC distributed generation system. The battery model considered . The battery model used is based on voltage model proposed by Shepherd.

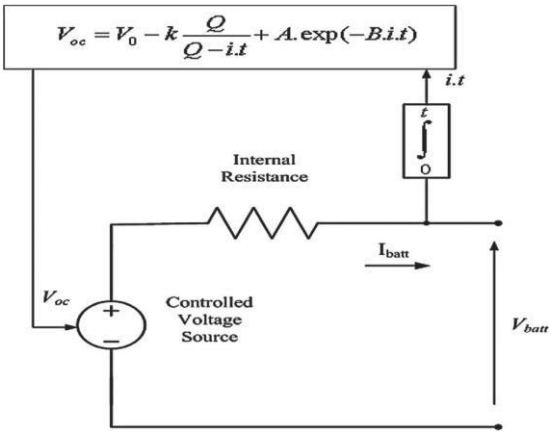

Fig.3. Battery Model

DC/DC Boost Converter Model :

While connecting a fuel cell/ PV array to the grid it is necessary to boost the voltage. The

boost converter shown in fig.4 is used for this purpose.

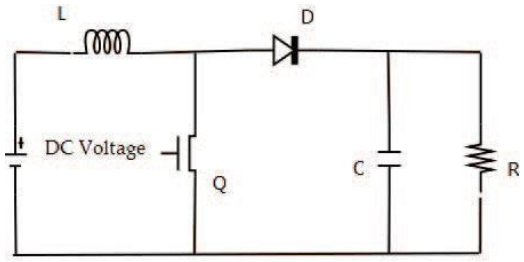

Fig.4. DC-DC Converter Model

The boost converter shown in fig.4 consists of one switching device that enables it to turn on and off depending on the applied gate signal D. The gate signal for the GTO can be obtained by using ANN.

DC/AC Inverter Model :

The dynamic model of the voltage source inverter (VSI) is used. The DC/AC inverter is shown .To eliminate the harmonics filters are used in between grid and the inverter. The dynamic model of the VSC inverter is represented.

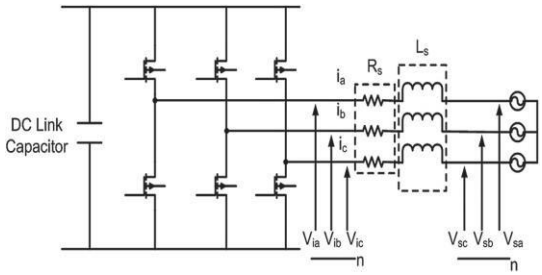

Fig.5. DC/ AC Three Phase Inverter

III. SIMULATION MODEL AND RESILTS

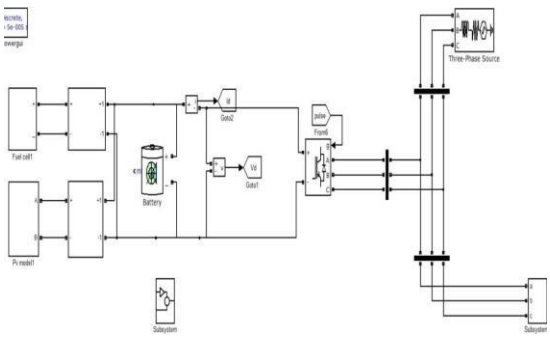

Fig.6. Simulink Model of Proposed System

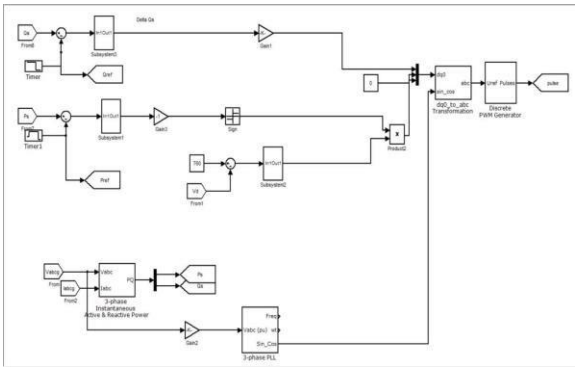

Fig.7. Control System for Pulse Generation

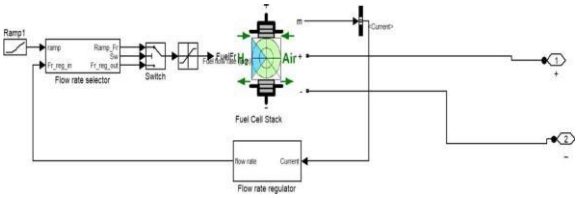

Fig.8. Fuel Cell Model

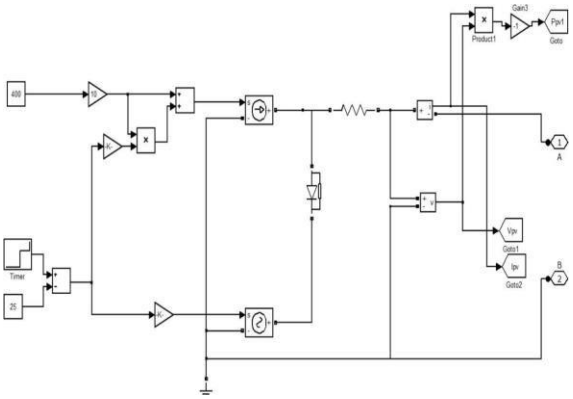

Fig.9. PV Model

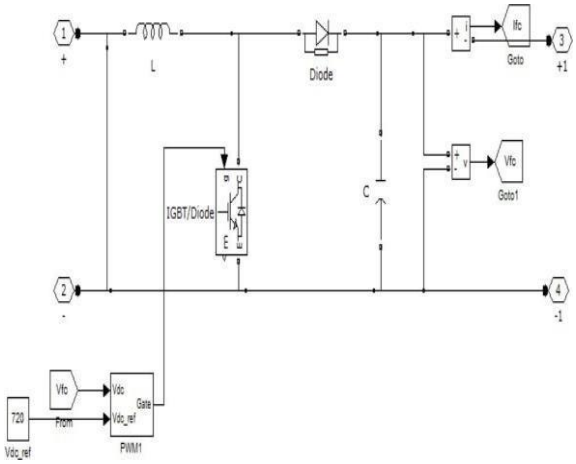

Fig.10. Boost Converter

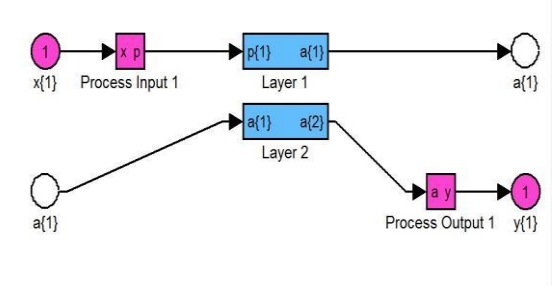

Fig.11. Simulation Model of ANN

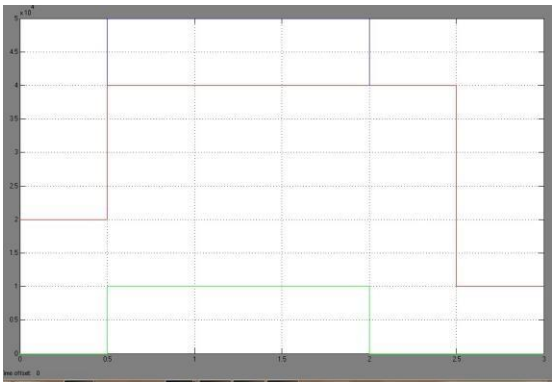

Fig.12. Simulation Results of Active Power of load , Hybrid &Grid Power

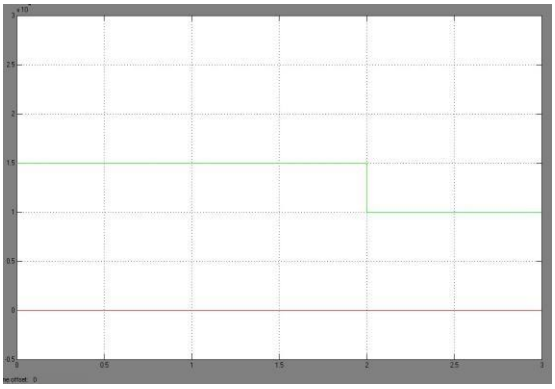

Fig.13. Simulation Results of Reactive Power load, Hybrid Power System & Grid Power

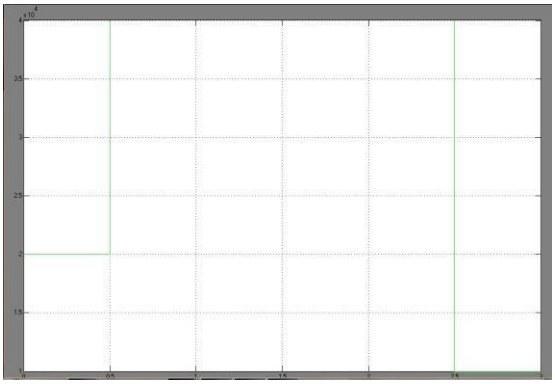

Fig.14. Simulation Results of Hybrid Active Power & Reference Active Power

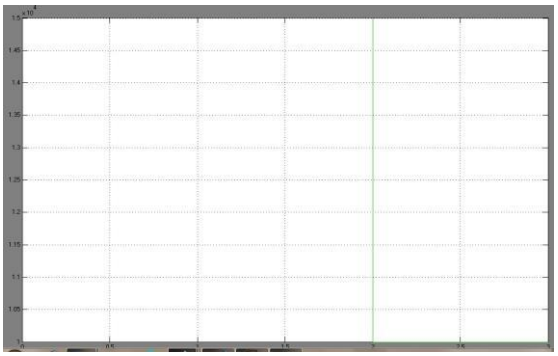

Fig.15. Simulation Results of Hybrid Reactive Power & Reference Reactive Power

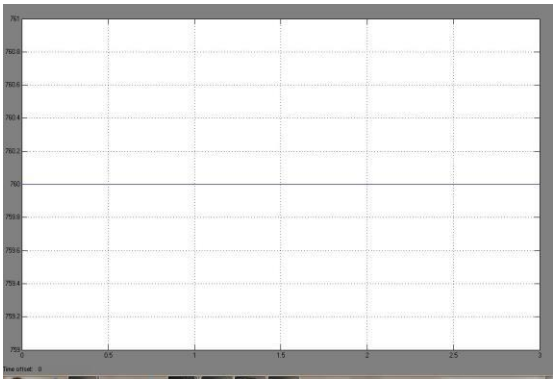

Fig.16. Simulation Results of Battery Voltage

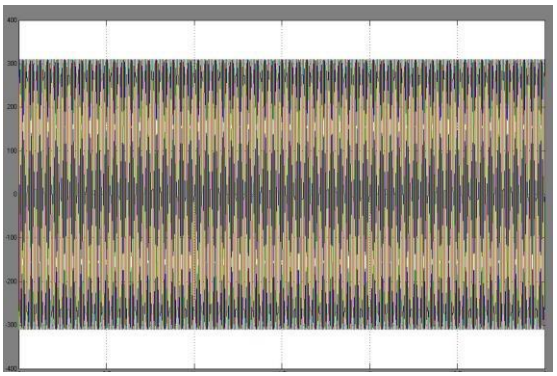

Fig.17. Simulation Results of Voltage at PCC

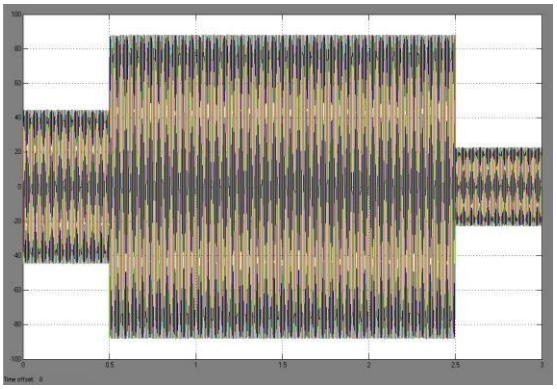

Fig.18. Simulation Results of Currents at PCC

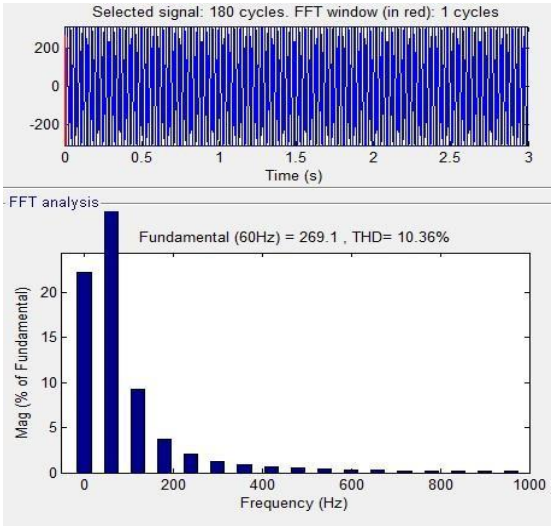

Fig.19. FFT Analysis of Voltage at PCC

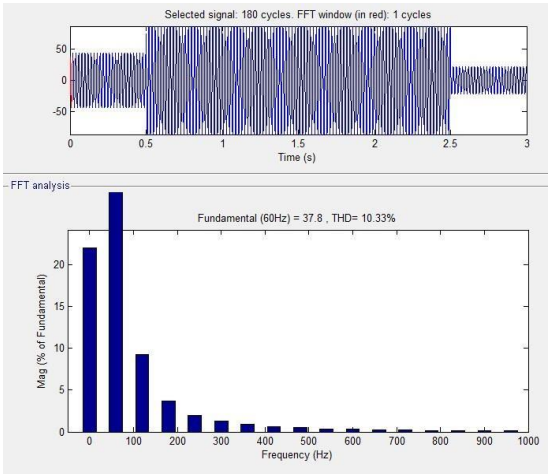

Fig.20. FFT Analysis of Current at PCC

IV. CONCLUSION

The proposed work deals with the power control strategies of a fuzzy controlled and ANN controlled grid connected hybrid photovoltaic/ proton exchange membrane fuel cell distributed generation system with battery storage. The battery responds quickly to load transients leaving the fuel cell to respond slowly.

The proposed MATLAB/SIMULINK based ANN controller tracks the reference real and reactive powers and allows the hybrid system to operate at or near unity power factor.

Table 1: Hybrid distributed generation system parameters.

PEMFC Parameters	
Faraday's Constant	96487000 C/kmol
Hydrogen time constant(t_{H2})	26.1 sec
Hydrogen valve molar constant(K_{H2})	8.43×10^{-4}
K_r Constant=N0/4F	9.9497×10^{-7}
No load voltage (E_0)	0.6V
Number of cells (N_0)	384
Oxygen time constant (t_{O2})	2.91 sec
Oxygen valve molar constant (K_{O2})	2.52×10^{-5}
FC internal resistance (r)	0.126 ohms
FC absolute temperature (T)	343 K
Universal gas constant (R)	8314.47 J/kmol k
Utilization Factor (U_f)	0.8
Water time constant (t_{H2O})	78.3 sec
Water valve molar constant(K_{H2O})	2.81×10^{-4}
Battery Model parameters	
Maximum allowable terminal voltage	730 V
Minimum allowable terminal voltage	710 V
Operating Terminal Voltage	725 V
SOC,%	70
DC/AC Converter Parameters	
Nominal AC Voltage	400 V
Nominal Phase Current	125 A
Nominal DC Voltage	720 V
R_s	0.9 mΩ
L_s	0.01mH
F_s (Hz)	50 Hz
DC/DC Converter Parameters	
Rated Voltage (V)	200/650V
Resistance (R)	2.3Ω
Rated Power	50KW
Capacitance (C)	1.5 mf
Inductor (L)	415 μH

REFERENCES

[1] Edward J. Coster, Johanna M. A. Myrzik, Bas Kruimer, Wil L. Kling, " Integration issues of distributed generation in distribution grids" proceedinds of IEEE, January 2011

[2] Djamila Rekioua and Ernest Matagne, “Optimization of Photovoltaic Power Systems”, Springers, 2012

[3] M. Hashem Nehrir and C. Wang, “Modelling and Control of Fuel Cells”, Wiley, 2009

[4] C. M. Shepherd, "Design of primary and secondary cells II .An equation describing battery discharge", J. Electrochem. Soc. 112, 657 (1965).

[5] A. Hajizadeh and M. Aliakbar-Golkar "Fuzzy Control of Fuel Cell Distributed Generation Systems" Iranian Journal of Electrical & Electronic Engineering, Vol. 3, Nos. 1 & 2, Jan. 2007.

[6] Golkar M. A. and Hajizadeh A., "Intelligent power management strategy of hybrid distributed generation system,".Journal of Electrical Power and Energy Systems, June 2007

[7] Amin Hajizadeh, Samson G. Tesfahunegn, and Tore M. Undeland, " Intelligent control of hybrid photo voltaic/fuel cell/energy storage power generation system" J. Renewable Sustainable Energy 3, 043112 (2011); doi: 10.1063/1.3618743

[8] Loc Nguyen Khanh, Jae-Jin Seo, Yun-Seong Kim, and Dong-Jun Won,"Power Management Strategies for a Grid connected PV-FC HybridSystem" IEEE transactions on Power Delivery, July 2010

[9] T. Praveen Kumar, N. Subrahmanyam, M. Sydulu "Control strategies for a grid connected hybrid energy systems" IEEE TENCON Spring 2013.

[10] F. Katiraei and M. R. Iravani, "Power management strategies for a microgrid with multiple distributed generation units," IEEE Trans. PowerSyst., vol.
21, no. 4, pp. 1821–1831, Nov. 2006.

[11] Amin Ghazanfari, Mohsen Hamzeh, Hossein Mokhtari, *a*nd Houshang Karimi, "Active Power Management of Multihybrid Fuel Cell/Supercapacitor Power Conversion System in a Medium Voltage Microgrid" IEEE Transactions on Smart Grid, December 2010

[12] JIANG Z., GAO L., DOUGAL R.A.: 'Flexible multiobjective control of power converter in active hybrid fuel cell/ battery power sources', IEEE Trans. Power Electron., 2005,

[13] El-Samadhi I. and El-Satiny E., "The Effect of DG on Power Quality in a Deregulated Environment," in Proc. IEEE PES General Meeting, Jun. 2005.

[14] Tanrioven M, Alam MS. "Modeling, control and power quality evaluation of a PEM fuel cell based power supply system for residential use". In: Proceedings of the 39th IAS annual meeting, vol. 4; 2004. p. 2808–14.

[15] El-Shater TF, Eskander M, El-Hagry M. Hybrid pv/fuel cell system design and simulation. In: 36th Intersociety energy conversion engineering conference, Savannah, GA; July 29–August 2, 2001.