Journal of Engineering Sciences
Vol 13, Issue 06, June/2022
ISSN NO:0377-9254

NEURAL NETWORK CONTROLLER BASED SWITCHED RELUCTANCE MOTOR DRIVE FOR EV APPLICATIONS

G. RAMESH[1] SIRIPURAM VINAY[2] GAJULA SAKETH[3] MITTA NARESH[4]
[1]Assistant Professor, Department of EEE, Jyothishmathi institute of technology and science,Nustulapur, Karimnagar, TS, India
[2,3,4]UG students, Department of EEE, Jyothishmathi institute of technology and science,Nustulapur, Karimnagar, TS, India
ramesh.07222@gmail.com, vinaysiripuram44@gmail.com, sakethgajula19@gmail.com, nareshmitta23@gmail.com

Abstract*: An electric vehicle's switching-reluctance drive is improved using neural network (NN) controllers under open and short-circuit faults. Electric vehicles driven by SRM have a larger global market share than those powered by PMM. The integration of many power sources in a hybrid vehicle may allow it to go further on a single charge. A switch reluctance motor is used as a power source in this study (SRM). In place of PI controllers, this application makes use of neural networks. To avoid overshoot and minimise torque ripple, simulations show that a NN controller can correctly monitor the motor's speed. When used in conjunction with NN, SRMs outperform conventional controllers (PI).

Keywords: **Switched Reluctance Motor (SRM), Electric Vehicles (EV), Neural Network (NN) controller**

I. INTRODUCTION

In computing, an artificial neural network (ANN) refers to a system based on a simplified representation of how the human brain functions. For example, they may obtain insight into the workings of a physical system by analysing experimental data or building computer simulations of it. Numerous technological fields are benefiting from the usage of neural networks (ANNs), Pattern recognition [2], signal processing [3], and dynamic modeling [5, 6] all emphasize the need of adaptation. Neural networks have proved useful in the discovery and diagnosis of electrical machine faults, the management of power converters, and the high-performance control of electrical motors, among other things.Owing to its inherent parallelism, ANNs are attracting a lot of attention in a wide range of scientific domains due to their ability to handle data quickly and perform real-time applications.

Fig 1. Switched reluctance motor drives in a 10/8 arrangement.

They may also work effectively in loud environments. When it comes to automotive and hybrid electric vehicle applications, the Switched Reluctance Motor (SRM) has advanced significantly during the last two decades. As a result of SRMs' low price and strong torque-to-weight ratio, the automotive industry has increasingly used them (TW). As illustrated in fig. 1 and fig. 2, SRM topologies include the 6/4 and 8/6 as well as the 10/8 (1). Phase current and rotor position must be precisely modelled to appropriately describe the magnetic properties of the SRM. The variable saturation levels of the magnetic circuit make it difficult to build a mathematical model of it. It is now much simpler to develop controllers and assess their performance using linear models [5]. Specifically, the emphasis of this study is on SRM speed controllers. The neural controller's performance is compared to that of a conventional control scheme in order to ensure that the appropriate current profile is enforced by mapping incremental changes in reference current (output), speed error and change (inputs), and torque ripples (torque ripple reduction). Several computer

simulations [6–7] back up the efficacy of this strategy.

II.LITERATURE SURVEY

[1] "Identification and management of dynamical systems using neural networks," IEEE Trans on Neural Networks, vol.1 March 1990, pp.4-27..

Neural networks may be used to identify and control nonlinear dynamical systems, as shown in this research, Models are essential for both recognising and addressing issues. Relatively simple methods for altering settings will be discussed. The models described use novel approaches to link multilayer and recurrent networks, therefore they must be thoroughly investigated. Simulated strategies for identification and adaptive control have been proved to be feasible in the actual world. Conceptual and theoretical issues are addressed at various points throughout the document.

[2] F.Fillippetti Neuron-aided induction motor rotor diagnostics on the line, IEEE Trans on Industrial Application, Vol. 3, pages 852–889, June 1995.

Using neural networks, machine rotor diagnostics may be enhanced. It may be better to employ a neural network to formalise the diagnostic system's knowledge base, rather than depending on a faulty machine model. The diagnostic system is able to distinguish between healthy and faulty equipment after training the neural network using data from trials on healthy machines and simulations in the event of malfunctioning devices.. A trigger threshold may be calculated using this approach instead of a machine model.

[3] "Neural Network applied for torque ripple mitigation for SRM," EPE,Briton,Sep 1993,pp. 1-5.

An SRM's immediate torque is managed by the BP neural network in order to minimise torque ripple. For its nonlinear properties, neural networks are ideal for controlling SRMs of any size. Using the BP neural network of the Levenberg-Marquardt method and measurements of the static torque parameters of SRM, an inverse torque model and a torque model are produced. It may be possible to reduce the amount of torque ripple by establishing an appropriate phase current profile. An appropriate commutation strategy should be employed to limit torque ripple and avoid power converter voltage saturation across a wide speed range of operation. A number of computer simulations have shown the efficacy of this strategy for reducing torque ripple.

[4] For further information, see "Front-End Buck Converter Topology for SRM drives-Design & Control," published in Proceedings of the International IEEE Conference on 3 February 2003, pages 3013-3018.

In this paper, a front-end buck converter-based SRM topology is proposed, along with the construction and control methods it employs. Switching devices with the same voltage rating and an adjustable dc link voltage are all that are available. Four-quadrant operation is possible with this converter-driven SRM drive. The proposed converter design for the four-quadrant SRM drive system is based on extensive dynamic modelling and testing of the motor drive system. The advantages and disadvantages of the converter are enumerated.

[5] "High performance direct torque control for switching Reluctance Motor" was published in the Proceedings of the International Conference on ICSCI-2007, Vol. 2 in Hyderabad, India, on 13 January 2007.

The excellent performance and steady torque of an SRM (switched reluctance motor) 6/4 speed controller may be shown here. Direct Torque Control (DTC) technology should be used as the basis for a new strategy. The output voltages of each inverter are derived by comparing the command and actual torque errors, as well as the rotor angle. As opposed to utilising a current controller, the DTC directly activates and deactivates the power electronic switches. In order to verify the controller's nonlinear performance, we run SRM simulations on it.

III.PROPOSED SYSTEM

Figure 1 shows the 10/8 SRM block diagram, which we utilised as our final decision-making tool: batteries, 5-phase converters, an SRM drive, and an SRM-to-NN speed controller. The drive system's controls are shown in Figure 1. Internal and exterior speed control are both provided via the controller's current loops. By employing an incorrect reference speed, the controller creates a reference current. A current controller regulates the flow of current via a circuit at preset values at each stage.

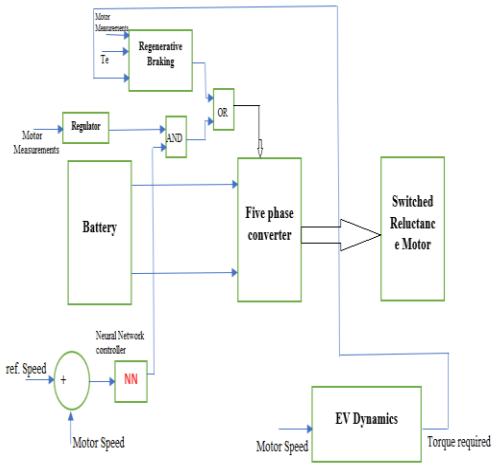

Fig 2 Block Diagram of the SRM drives

IV. NEURONAL NETWORK-BASED SPEED CONTROLLER.

For SRM speed control, figure 3 depicts a supervised neural network (NN) controller (NN)..

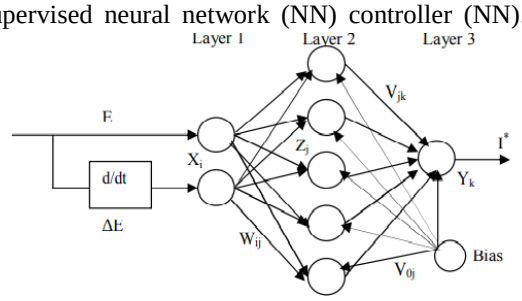

Figure 3 A neural network-based control system.

Training weights (I*) on SRM drives are used to minimize tracking error between I and I*. NN controllers are trained on SRM drives to reduce the tracking error between I and I* (EE). Neuronal network-based control's nonlinearity and adaptability may enhance industrial operations by dealing with noise. An input neuron called Xi and an output neuron called Yk are two kinds of neurons in the neural network (Zj). Tansigmoide is utilized to activate the hidden layer, whereas purelin is used to activate the output layer. In order for a neural network controller to operate well, the weights of each layer neuron Wij, Vjk have an impact. In order to train the neural network, traditional controllers were used.

V. ELECTRIC VEHICLE MODELLING

Vehicles powered by electric power The dynamics of electric cars Total tractive forces must be estimated in order to accurately represent the dynamics of an electric car. Effort necessary to move a vehicle is referred to as "tractive effort" in the context of this discussion.Rolling resistance force, Frr = μrr.m.g (1)

rolling resistance, megatonnage, and gravitational acceleration all feature in this equation:.

2. Aerodynamic drag, Fad = ½ ρ.A.Cd.V2 (2)

The drag coefficient is determined by air density, frontal area, and velocities. Cd is equal to Cd/A, which is equal to Cd/V.

3. Hill climbing force, Fhc = m.g.sin (ψ) (3)

Where ψ is the inclination angle of the slope.

4. Linear acceleration force, Fla = m.a (4)

Where a is the acceleration.

5. Angular acceleration force, Fωa= I.Gratio2 .a/ (ηg.r2) (5)

In the context of the tyre radius, the motor rotor's moment of inertia, gear ratio, and gear efficiency, r is the tyre diameter.

Listed below are the parameters of the switching reluctance motor and electric vehicle dynamics used in the simulation (Tables 1 and 2). Powered by 48V/200Ah lithium-ion batteries, the system is able to do

TABLE 1 Electric vehicle dynamics

S. No.	Vehicle model parameter	Values
1.	Payload [kg]	720
2.	Gross Weight (m) [kg]	970
3.	Width (w) [mm]	1324
4.	Height (h) [mm]	1510
5.	Frontal Area (A) [m²]	1.6225
6.	Rolling Resistance Coefficient (urr)	0.005
7.	Drag Coefficient (Cd)	0.6
8.	Transmission efficiency (ηg)	0.95
9.	Gear ratio (Gratio)	16
10.	Gravity acceleration, (g) [m/s2]	9.81
11.	Air-density (d) [kg/m3]	1.25
12.	Regenerative braking factor (RgR)	0.3
13.	Accessories power [watt]	250
14.	Equivalent vehicle inertia (kg.m2)	8.00

TABLE 2 Switched reluctance motor parameters

S. No.	SRM parameter	Values
1.	Model (Generic)	10/8
2.	Stator resistance (ohm)	0.05
3.	Stator inductance	970
4.	FRICTION (Nm-s)	0.005
5.	Inertia (kg.m2)	0.0082
6.	Unaligned inductance (H)	0.00067
7.	Aligned inductance (H)	0.0236
8.	Saturated aligned inductance (H)	0.00015
9.	Maximum current (A)	400
10.	Maximum flux linkage (V.s)	0.486

VI. FAULT ANALYSIS

Simulation, modeling, and fault analysis are essential tools for evaluating the dependability of an electric motor system. Due to the fact that the SRM drive's components might fail in reality. To find out how an SRM-powered electric vehicle performs in a variety of fault scenarios, researchers conducted this study Accordingly, the following examples will be used as examples:

1. Normal Condition:

The flux, current, torque, and speed variations of an SRM-driven electric vehicle are used to determine the output. 2. 2. Separate criteria for each step

Isolated phase condition is considered because the phase is split when the circuit is open and the HRC fuse blows to isolate the troublesome area when the circuit is shorted. What we have here might be categorized as follows:

1. Problem with the converter switch

2. Open circuit in just one phase

3. Open circuit failure in both phases

4. Incompetent single-phase power supply

5. malfunction in both phases of a three-phase system

6. In the event of a phase-to-phase fault,

3. The constant up-and-down of a flight of steps has an impact.

Regenerative braking has a noticeable effect on downclimbing since the climbing process is studied both up and down.

Calculation of Torque-Induced Ripple Forces "Torque ripple" describes the variation in the average torque as compared to that variation between the greatest and lowest torque values. Formulas are used to arrive at a conclusion (6),

$$\% \text{ Torque ripple} = (T_{max} - T_{min}) / T_{avg} \quad (6)$$

where,

T_{max} = Maximum value of the torque

T_{min} = Minimum value of the torque

T_{avg} = Average value of the torque

VII. SIMULATION RESULTS

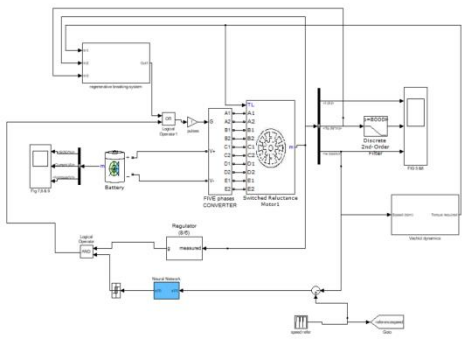

Fig.4 SRM-driven electric car simulation in Simulink with NN controller

Case 1: Normal Condition

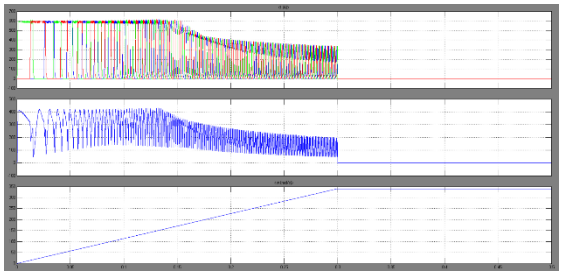

Fig.5 (a)Current (b) Torque (c) and speed for regular functioning of SRM

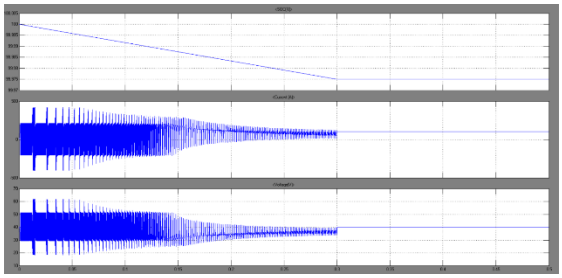

Fig.6 (a) Battery SOC for normal operation (b)Battery current for normal operation (c) Battery voltage for normal operation

Case2: Converter switch short circuit fault

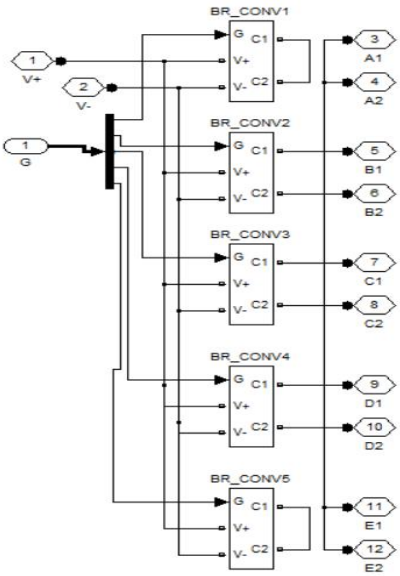

Fig 7 Single phase short circuit fault in converter

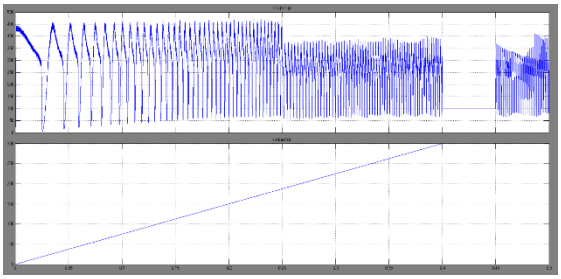

Fig.8 (a)SRM torque for converter switch short circuit case (b)Speed for converter switch short circuit and isolation case

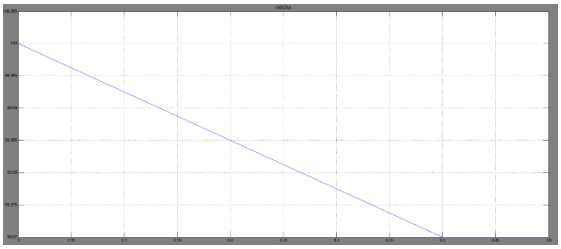

Fig.9 A short circuited converter switch battery

Case-3: Single phase open circuit fault

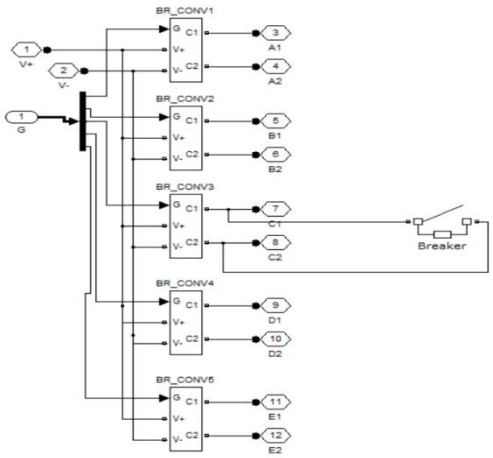

Fig.10 Single phase open circuit fault in converter

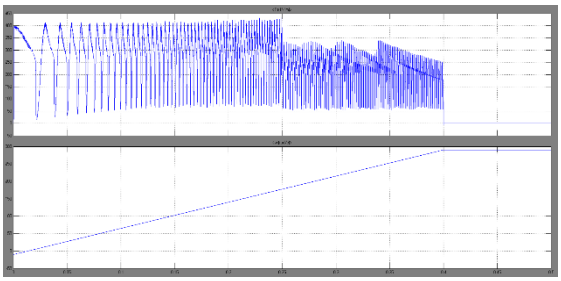

Fig.11 (a)SRM torque for single phase open circuit fault (b)Speed for single phase open circuit fault

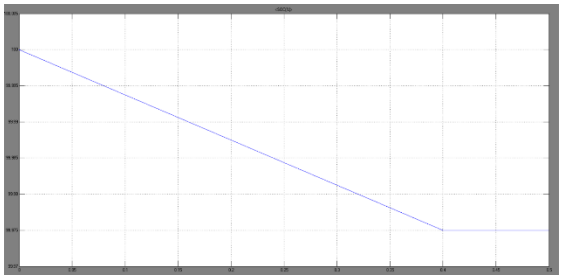

Fig.12 Battery SOC for single phase open circuit fault

Case-4: Incompetent single-phase power supply

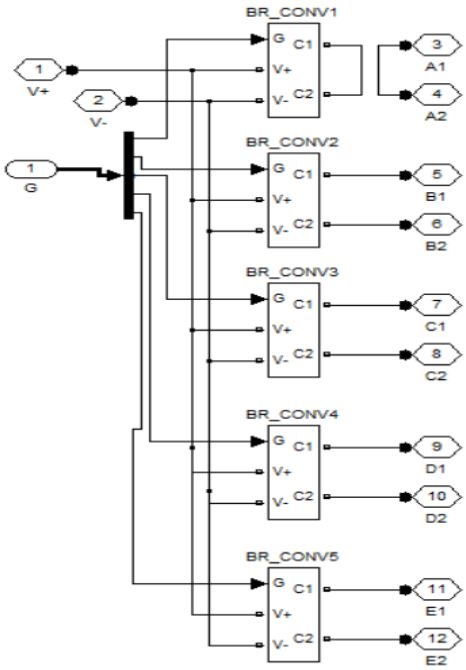

Fig .13 Single phase short circuit fault in converter

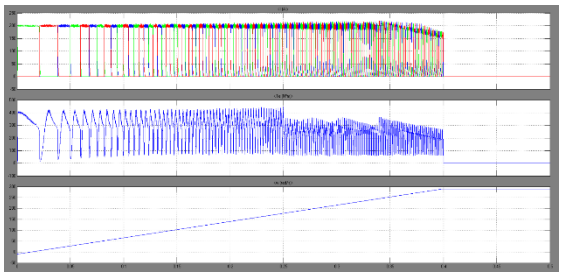

Fig.14 (a) Short circuit currents (b) SRM torque (c) Speed for short circuit and isolation case

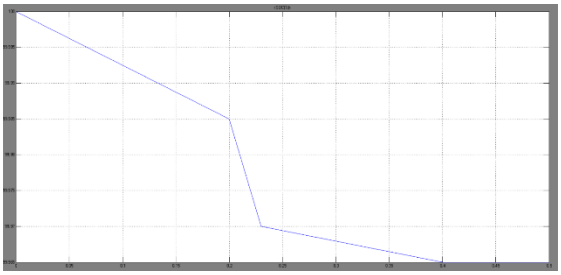

Fig.15 Battery SOC for single phase short circuit case

Case-5: Impact of up climbing and down climbing:

1) At a steeper angle Θ = 20°.

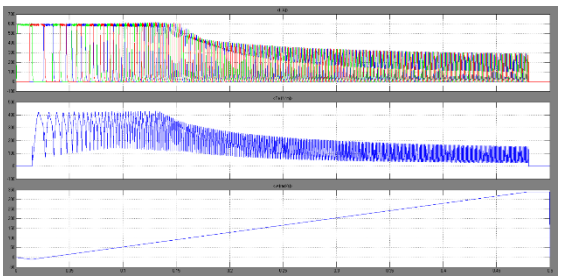

Fig.16 (a) Phase currents in SRM (a) SRM force (b) Consistent uphill operation at SRM speed (c).

short circuit in one phase

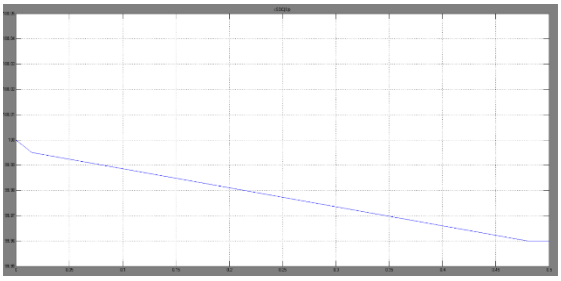

Fig. 17 While rising, the battery's SOC was 16 percentCase-6 Down climbing at a slope of Θ = -20°.

Without regenerative braking

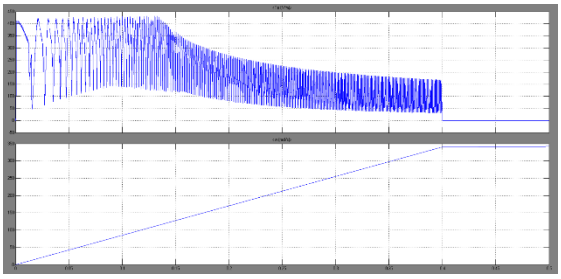

Fig.18 (a)SRM torque for down-climbing operation without regenerative braking (b)Speed for down-climbing operation without reg. braking

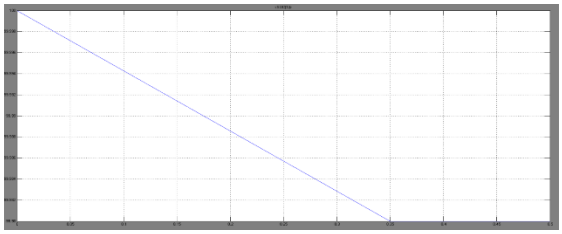

Fig.19 Normal down-climbing with fully charged battery

Case 7: At a steep slope, one must descend. Θ = -20°.

With regenerative braking

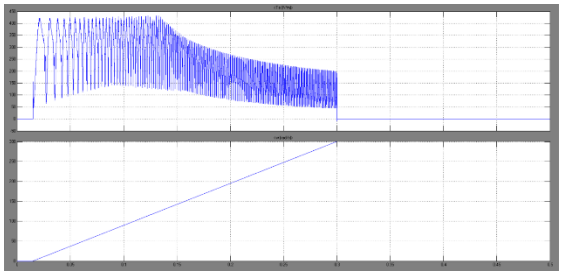

Fig .20 a)SRM torque for regenerative braking down-climbing use Regulated braking for down-climbing operation (b) speed

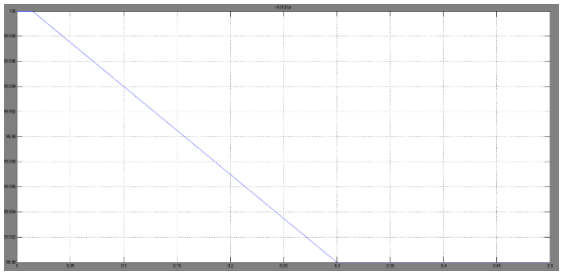

Fig.21 Battery SOC for descending when braking with the regen.

CONCLUSION

A neural network-based SRM drive speed control is shown in this study. Their robust and simple-to-tune controller makes them appropriate for high nonlinear systems. When it comes to SRM, it's nonlinear. The neural network controller is able to handle a wide range of failures. Both transient and steady-state performance can be achieved using the neural controller proposed in this study. Real-time implementation is possible if the system is simple, robust, and easy to modify.

REFERENCES

[1] T.J.E.Miller, "Switched Reluctance motors and their control", Hillsboro,OH magna physics 1993

[2] K.S.Narenda, K. Parthrarathy,"Identification and control of dynamical system using neural networks", IEEE Trans on Neural Networks, vol.1 March 1990, pp,4-27.

[3] F.Fillippetti G.Franceschimin, L. Tassion, "Neural Network aided on line diagnostics of induction motor rotor faults", IEEE Trans on Industrial Application. Vol 3 June 1995, pp 852-889.

[4] D.S.Reay. T.C Green and B.W.williams,"Neural Network used for torque ripple minimization for SRM", EPE,Briton,Sep 1993,pp 1-5.

[5] P.Vijayraghavan and R.Krishanan., " Front-End Buck Converter Topology for SRM drives-Design & Control" , Proceedings of International IEEE Conference, 3 Feb 2003, pp. 3013-3018.

[6] C.Muniraj and R. Jeyabharth, "High performance direct torque control for switched Reluctance Motor" , Proceedings of International conference on ICSCI-2007, vol.2 Hyderabad, 13 jen 2007, pp. 13-16.

[7] C. Muniraj and S. Chandrasekar, "Fuzzy logic control and Faults Analysis of 6/4 Switched Reluctance Motor", Proceedings of international conference on modeling and simulation, CIT India, 27-29, Aug 2007, pp.909-915.

[8]. T. J. E. Miller, Switched Reluctance Motors and their Control. Oxford, U.K.: Oxford Science, 1993.

[9]. Krishnan, R., "Switched Reluctance Motor Drives: Modelling, Simulation, Analysis, Design, and Applications", CRC Press, 2001.

[10]. Shyam S. Ramamurthy and Juan Carlos Balda "Sizing a Switched Reluctance Motor for Electric Vehicles" IEEE Transaction on industrial electronics, vol. 37.

[11]. P. C. Kjaer, J. Gribble, and T. J. E. Miller, "High-grade Control of Switched Reluctance Machines," IEEE Trans.Industry Electronics, Vol. 33, pp. 1585–1593, Nov. 1997.

[12]. Lawrenson, P.J., and AGU, L. A., Theory and performance of polyphase reluctance machines, IEEE Proc. B, Electr. PowerAppl., 1964,111, pp. 1435-1445.

[13]. Lawrenson, P.J., Stephenson, J.M., Blenkinsop, P.T., Corda, J., and Fulton, N.N. Variable-speed switched reluctance motors, IEEE Proc, 1980,Vol.127, Pt.B.No (4), pp. 253-265.

[14]. Changhwan Choi, Seungho Kim, Yongdae Kim and Kyihwan Park, "A New Torque Control Method of a Switched Reluctance Motor Using a Torque-sharing Function", IEEE Transactions on Magnetics, vol. 38, no. 51, pp. 3288-3290, 2002.

[15]. J. Larminie and J. Lowry, Electric Vehicle Technology Explained: Second Edition. 2012.