IOT AND MACHINE LEARNING APPROCH RAPID SCREENING FOR COVID -19

Mr. K Raghavendra[1], P Sravani[2], K Nikitha[2], K Umasri[2]

[1]Assistant Professor, Department of ECE, Malla Reddy Engineering College for Women, Hyderabad, Telangana, India.
[2]UG Scholar, Department of ECE, Malla Reddy Engineering College for Women, Hyderabad, Telangana, India

ABSTRACT

Design and Development of Real Time Face Mask Detection and Thermal Screening with Audio Response for COVID-19. The corona virus creates health problems and spreading fast than any other virus. Manual involvement in each case will not bring complete solution and consumes lot of man power. Especially for monitoring of manual entries at doors and gates is difficult and announcement of instructions also tough. To solve this issue, we propose system that can monitor face mask detection and temperature reading and announce through audio. Here project title is real time face mask detection and thermal screening with audio response for covid-19 with IOT. Arduino and ESP32-CAM are connected together through Serial interface. MLX90914 (contactless temperature sensor) connected to Arduino i2c port. APR module connected to Arduino digital pins. ESP8266 (IOT module) connected to Arduino UART port. ESP32-CAM module has built-in WIFI and camera. It can connect to WIFI hotspot or WIFI router and established connection to local network. It will stream video on HTML web page through IP address. Also WIFI module (ESP8266/IOT) also connected to same network to post data to IOT server. In this project we have to show face in front of camera and press button then it will detect face mask status. After face mask detected then it scan temperature Also data will be posting to IOT server.

Keywords: COVID-19, machine learning, OpenCV libraries, Raspberry Pi, ESP-32 CAM.

1. INTRODUCTION

The coronavirus disease 2019 (COVID-19) pandemic is currently perceived as one of the greatest global threats to public health and well-being and global economic and social stability. COVID-19 spreads mainly from person to person through respiratory droplets. Respiratory droplets travel into the air when you cough, sneeze, talk, shout or sing. These droplets can then land in the mouths or noses of people who are near you or they may breathe these droplets in. Masks are a simple barrier to help prevent your respiratory droplets from reaching others. Studies show that masks reduce the spray of droplets when worn over the nose and mouth.The rapid worldwide spread of the COVID-19 disease has resulted in a global pandemic. Wearing the face mask correctly is extremely crucial for infectious disease control, but the effectiveness of facemasks has been diminished, mostly due to improper wearing. This project is a cost-effective warning system to the people for wearing the masks by using the ESP32-CAM and Arduino. This model can be applied to safeguard public places or private businesses during the pandemic. It will help in ensuring that the mask-wearing policy is followed and the concerned authorities are notified so that they can take appropriate actions and prevent the further spread of COVID-19.Mandatory face mask rules are becoming more common in public settings around the world. Experts and scientific evidence support the effectiveness of face masks on reducing the spread of the virus. Therefore, face mask detection has become a crucial computer vision task to

help the society. This motivated us to make a cost-effective device that detects whether a person is wearing a face mask using deep learning. Potentially, this model can also be deployed at traffic signals or security cameras to check whether a person is wearing a mask or not. The identity detection of faces, violating the mask norms further, increases the utility of the system for public benefits.

The rise of COVID-19 pandemic has had a lasting impact in many countries worldwide since 2019. Facemask detection had been significant progress in the Image processing and deep learning fields studies. Many face detection models have been designed using different algorithms and techniques. The proposed approach in this paper developed to avoid mask-less people from entering to a desired places (i.e. Mall, University, Office, …etc.) by detecting face mask using deep learning, TensorFlow, Keras, and OpenCV and sending a signal to Arduino device that connected to the gate to be open. it detect a face in a real-time and identifies whether the person wear mask or not. The method attains accuracy up to 97.80%. The dataset provided in this paper, was collected from various sources.After the arise of Covid-19, the Face-Mask detection has widely considered problem in the image processing field. This technology is currently more appropriate because it is applied to detect faces and to identify people wearing masks in images, videos and also in real-time vision. By using deep learning and convolution neural network (CNN) techniques, it become possible to achieve high accuracy results in image classification and object detection applications. Creating a system for detecting the face-mask will provide a way for controlling the people who enters any places. The proposed system in this paper uses deep learning, TensorFlow, Keras, and OpenCV which are used as an image classifier to detect face-mask and sends a signal to Arduino device that control the open and close of door.

In this project, we will build an ESP32 CAM Based Face & Eyes Recognition System. This tutorial introduces everyone to an efficient video streaming method wirelessly. Here we have used the ESP32-CAM module, which is a small camera module with the ESP32-S chip. Besides the OV2640 camera and several GPIOs to connect peripherals, it also features a microSD card slot that can be useful to store images taken with the camera.We will go through ESP32 CAM features, pins description, and the method to program this device using FTDI Module. Then we will install the ESP32 CAM Webserver Library & upload the example Code using Arduino IDE. Apart from this, we will also install the required Python Libraries. Later we will go through the python code for Face & Eyes Recognition.This is an essential tutorial as you will be able to use any sort of Image processing or Machine Learning on the live video without having to write it on Arduino IDE.

Since the last days of 2019, the diagnosis of a respiratory infection such as the COVID-19 virus caused by SARS-COV-2 also known as corona virus has impacted majority of the people's health all over worldwide. The footprints of COVID-19 were identified in china, later it was quickly spread to the other countries in a little span of days. According to, as of March 31, 2021, the number of reported cases were 138,865,554 from which 2,986,118 lives were taken worldwide. Major symptoms of COVID-19 includes fever, fatigue, sore throat, nasal congestion, loss of taste and smell. In many cases, it is transmitted directly (from one person to another) through the droplets of respiratory. If a person is affected with COVID-19 virus then the symptoms will be shown between 14 and 27 days in most cases. In addition, even asymptomatic individuals (about 45% cases) can spread the disease making the condition worse. Therefore, the use of face masks and sanitation has shown good results when talking about reducing the spread of infections. However, we do not have proper medication and reliable vaccines available in the market.Due to these facts, many safety and security measures were taken by government in order to reduce the spread of COVID19, such as wearing mask, isolation, reducing citizen mobility within national and international travelers, often associated with preventing major public gathering events. Although the epidemic seemed to be weak in some areas, many safety

rules are still in place due to the unstable situation. From work ethic to social relationships, sports and entertainment, corona virus is making many changes in our daily routine, habits and activities. In this project, we have designed a low cost IOT system to help organizations comply with the COVID -19 safety rules and instructions strictly to decrease the rate of spreading of COVID-19. Our main motto is to detect whether the person is wearing a mask and his body temperature is normal or not. No person will be allowed to enter without mask or with high body temperature. Only the person with both conditions passed will be sent inside the area. The system uses temperature sensor and a laptop connected to the raspberry pi system to control all operations. The laptop camera is used to detect the mask and sensor to check the body temperature. The raspberry analyzes the input sensor and determines whether the person should be allowed or not.

2. LITERATURE SURVEY

In the Era of 2020, the world has moved towards a great pandemic, in which every human was suffered due to pandemic situation and lockdown. After the lockdown as per the practical report[1], around 85% of respondents voted to resume their work places, but due to spread of COVID-19, this is practically impossible to unlock the lockdown without following proper guidelines and safety precautions, in which wearing mask at public places was the major and primary safety precaution that everyone can follow[2.. In order to allow the opening of work places by following necessary precautionary measures we have developed an IOT system which allows the person to enter the public place if and only if he follows COVID-19 precautionary measure According to World Health Organization (WHO), since December 2019 more than 114 countries suffered from COVID-19 pandemic which has declared as a deadly diseases that has globally infected over 110 million people causing more than 2.43 million deaths in the worldwide as on Feb 18, 2021, In Iraq since the rise of COVID-19 more than 653000 effected case and more than 13000 deaths has been registered, this is Due to the insufficient vaccinees to overcome this deadly disease till date [3]. Wearing a facemask during this pandemic is a critical defensive in times when social distancing is hard to maintain. Therefore, many face mask detection and monitoring systems have been developed to provide effective supervision for hospitals, public transportations, airports, retail locations, and sports venues. Over years, in the field of image processing, computer vision and pattern recognition, face detection is the very first step for various applications that depends facial analysis algorithms for identifies, recognize human faces and also to capturing facial motions in digital images, including the face recognition, face alignment, face verification, age recognition, face modelling, face authentication, access control, forensics, and human-computer interactions. face relighting, facial expression tracking, head pose tracking, facial expression recognition, gender recognition, and other face-detection based applications [4].

Face detection is a technique for recognizing or confirming an individual's identity by looking at their face. Face recognition software can identify people in pictures, videos, or in real time. Over the past 60 years as shown in Fig-1, face detection methods widely used in various industries and have benefitted from the improvements in this technology and these include: law enforcement, border control, retail, mobile technology and banking and finance [5].

1964: Bledso did a facial programming experiment. They imagine a semi-automnmatic input method, in which the operators enter twenty different measures, such as the size of the mouth and eyes [6].

1977: 21 new markers were added to the Bledso 1964 system to improved it (i.e. , width of lips, eyes color, hair color)[7].

1988: Artificial intelligence was used to improve previously used computational methods that exposed multiple flaws. Mathematics ("linear algebra") are used to view symbols uniquely and to find a way to simplify and modify them independently of human markers.

1991: EIGENFACES which was the first successful techniques used in facial recognition technology, that depend on the statistical Principal component analysis (PCA) method, Was developed by Pentland and Turk of the Massachusetts Institute of Technology (MIT) [8].

1998: Face recognition technology "FERET program" developed by the Defense Advanced Research Projects Agency (DARPA), created a database of 2400 images for 850 persons of deferent age and gender.

2005: The Face Recognition Grand Challenge (FRGC) was created to promote and improve face recognition technologies that would complement existing facial recognition initiatives[9].

2011: using deep learning and machine learning techniques that depend on artificial neural networks, enables The system to selects a point for the comparison: in large databases.

2014: Facebook's internal algorithm, Deepface, allows it to identify faces. According to the social network, the process comes close to matching the output of the human eye in approximately 97% of images.

2017: Apple launched a facial recognition technology in its updates, and its use has expanded to retail and banking.

2017: Selfie Pay is a facial recognition system for online transactions developed by Mastercard.

In 2018, Chinese police used a smart monitoring system focused on live facial recognition to arrest a suspect of "economic crime" at a concert where his face was recognized in a crowd of 50,000 people after being identified in a national database.

From 2019, People who want to purchase a new phone in China will now agree to have their faces scanned by the operator[10]. Deep Learning (DL) is basically a subpart of Machine Learning (ML) model which involves algorithms that concerned with algorithms inspired by the structure and function of the brain and uses multilayer neural networks called artificial neural networks [11]. Basically, both DL and ML belongs to the higher field Artificial Intelligence (AI) DL depends on Neural Network layers that transforms the input in some way to produce output to implement its functioning. In deep learning, Image can be called as "matrix of pixel values", therefore it can be a more easier to classify complex images matrix or images with similar forms of matrix or a very huge dataset of images with minimal changes in the matrix by depending on deep learning matrix classification. This may lead to clash in prediction scores and thereby affecting the accuracy and speed of classifier model [12]. TensorFlow is an open-source library with a large number of pre-designed models that are useful in Machine Learning and particularly in Deep Learning. The term TenserFlow consists of two parts "Tenser", which considers as an Array of N-Dimensional, and "Flow" considers graph of operations. TensorFlow is an open-source software library for numerical computation using data flow graphs. TensorFlow is designed for large-scale distributed training and inference. Nodes in the graph represent mathematical operations, while the graph edges represent the multidimensional data arrays (tensors) communicated between them [13]. TensorFlow was created and is maintained by the Google Brain team within Google's Machine Intelligence research organization for Machine Learning (ML) and Deep Learning (DL). It is currently released under the Apache 2.0 opensource license. The distributed TensorFlow architecture contains distributed master and worker services with kernel implementations. These include 200 standard operations, including mathematical, array manipulation, control flow, and state management operations written in C++.

TensorFlow was designed for use both in research, development and production systems. It can run on single CPU systems, GPUs, mobile devices and large-scale distributed systems of hundreds of nodes. TensorFlow programming interfaces include APIs for Python and C++ and developments for Java, GO, R, and Haskell are on the way. TensorFlow is also supported in Google and Amazon cloud environments [14].

3. EXISTING SYSTEM

In the existing system of face mask detection and temperature sensor we are monitoring and alert the users using manual mode of operations. Due to that manual mode,it getting late for checking rapid screening of the students, employees and passengers in all stations. We are proposed an automatic model of auto detection and temperature monitoring and alert over IoT server.

4. PROPOSED SYSTEM

First connect the ESP32-CAM as mentioned in Table-1 to Arduino Uno board as shown below in the hardware setup. After the hardware setup upload the Arduino code to Arduino Uno board, since the ESP32-CAM is connected with the Arduino Uno board the code will directly upload into it also as shown in Fig-4. By providing the WIFI SSID and password in the Arduino code after uploading the code the ESP32-CAM will be connected with the respective WIFI support.

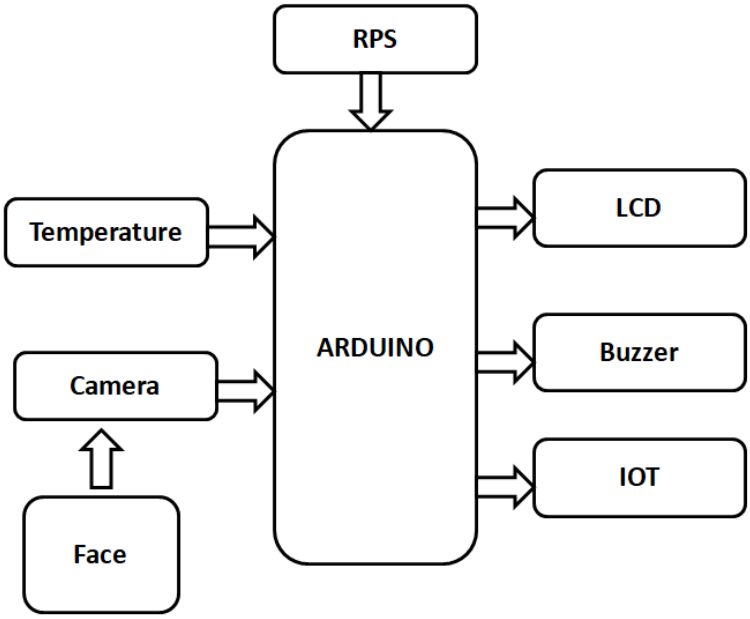

Figure 1: Proposed block diagram.

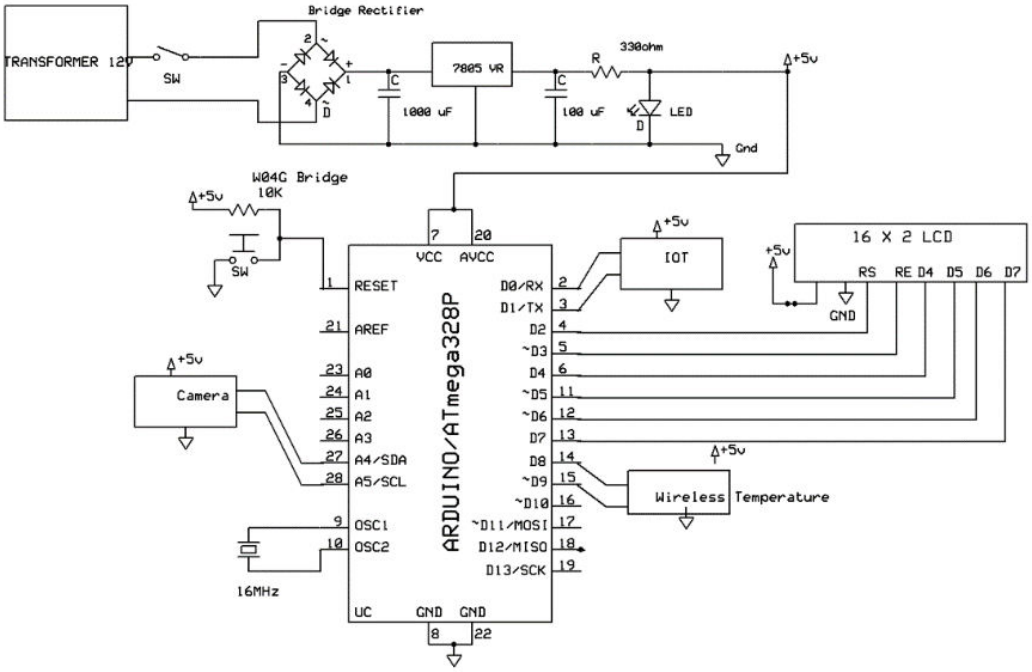

Figure 2: Schematic of proposed system.

Also, the same WIFI support should be connected in the laptop also.In the serial monitor present in the Arduino app IP address of the ESP32-CAM is generated. Copy the IP address URL and paste it in the face mask detection code. Using the terminal run the face mask detection code. Now ESP32_CAM is activated and starts live video streaming which we can see in the laptop. Then in the video we can see a rectangle box around the face which tells about the mask position on the person's face.

5V pin in Arduino is connected to 5V pin in ESP32-CAM.Ground pin in Arduino is connected with the ground pin of ESP32-CAM as shown in Fig. 1. The ground pin of Arduino is connected with reset pin as shown in Fig. 2.

- The TX (Transmitter) pin of Arduino is connected with GPIO 1 which is input pin of ESP32-CAM.
- The RX (Receiver) pin of Arduino is connected with GPIO 3 which is also input pin of ESP32-CAM.
- The GPIO 0 pin in ESP32-CAM is connected with the ground of ESP32CAM

Working

The proposed system is placed at the door where the house is to be protected. The Vibration sensor is placed on the ATM which is connected to port 8th pin of ARDUINO. When the sensor detects Vibrations, information is given to the microcontroller, and then lock system using DC motor which is Connected to port pin of ARDUINO controller. Buzzer which initiated to alert people and send the image to Gmail to alert bank people to preferred persons automatically. If anyonelosses ATM Card and if any one inserted stolen card into ATM same operation executes that buzzer will alert, dc motor close the door and GSMsend the SMS to authenticate person. Its easy to find stolen cards and easy to prevent ATM systems. LCD which is used to display the data the status of working. All input and output modules interfaced to ARDUINO micro controller by using ARDUINO IDE developing software.

5. Results

6. Conclusion

The sole purpose of this work was to take COVID-19 processes to another level by adding a face mask and gaining body temperature. Automatically, the complete process of checking the face mask and body temperature was replaced by the system. Depending on the results obtained, the designed system is very efficient in order to maintain the precautionary measures against COVID-19. The main advantage of our system is it depends on both open hardware and free software, to be a clear and desirable advantage of such program.

6.1 Future scope

Firstly, the proposed model can be integrated with any high-resolution video surveillance devices and not limited to mask detection. Secondly, this project can also be extended to detect facial landmarks with a facemask for biometric purposes. This application can be used in any working environment like any public place, banks, corporate environment, streets, shopping malls, examination centres, colleges etc, where proper use of face mask with high accuracy and precision is desired.

REFERENCES

[1] E. Dong, H. Du and L. Gardner, "An interactive web-based dashboard to track COVID-19 in real time", The Lancet Infectious Diseases, vol. 20, no. 5, pp. 533-534, 2020. Available: 10.1016/s1473-3099(20)30120-1 [Accessed 6 April 2021].

[2] P.S. Othman, R.R. Ihsan, R.B. Marqas, S.M. Almufti, "Image Processing Techniques for Identifying Impostor Documents Through Digital Forensic Examination". Image Process. Tech. 2020, 62, 1781– 1794.

[3] P. Othman, R. Marqas, D. Abdulqader and S. Almufti, "Effect of Mean Filter on Face Image from Video Frames", 2020 8th International Symposium on Digital Forensics and Security (ISDFS), 2020. Available: 10.1109/isdfs49300.2020.9116277 [Accessed 3 April 2021].

[4] I. Adjabi, A. Ouahabi, A. Benzaoui and A. Taleb-Ahmed, "Past, Present, and Future of Face Recognition: A Review", Electronics, vol. 9, no. 8, p. 1188, 2020. Available: 10.3390/electronics9081188.

[5] R. Ihsan, S. Almufti and R. Marqas, "A Median Filter With Evaluating of Temporal Ultrasound Image for Impulse Noise Removal for Kidney Diagnosis", Journal of Applied Science and Technology Trends, vol. 1, no. 2, pp. 71-77, 2020. Available: 10.38094/jastt1217 [Accessed 3 April 2021].

[6] R. Marqas, “Implementation and Experiments on Fingerprint Based Authentication System (FBAS) Using Delaunay Triangulation and Voronoi Diagram” (2017). [online] Hdl.handle.net. Available at: http://hdl.handle.net/11129/4191.

[7] R. Rajab Asaad and R. Masoud Abdulhakim, “The Concept of Data Mining and Knowledge Extraction Techniques”, QAJ, vol. 1, no. 2, pp. 17–20, Mar. 2021.

[8] R. Rajab Asaad, "Review on Deep Learning and Neural Network Implementation for Emotions Recognition", Qubahan Academic Journal, vol. 1, no. 1, 2021. Available: 10.48161/qaj.v1n1a25. Available: https://doi.org/10.48161/qaj.v1n2a43.

[9] S. M. Almufti, "Historical survey on metaheuristics algorithms", International Journal of Scientific World, vol. 7, no. 1, p. 1, 2019. Available: 10.14419/ijsw.v7i1.29497 [Accessed 6 April 2021].

[10] R. Asaad and R. Ali, "Back Propagation Neural Network(BPNN) and Sigmoid Activation Function in Multi-Layer Networks", Academic Journal of Nawroz University, vol. 8, no. 4, p. 216, 2019. Available: 10.25007/ajnu.v8n4a464 [Accessed 6 April 2021].

[11] R. Asaad, "Güler and Linaro et al Model in an Investigation of the Neuronal Dynamics using noise Comparative Study", Academic Journal of Nawroz University, vol. 8, no. 3, p. 10, 2019. Available: 10.25007/ajnu.v8n3a360 [Accessed 6 April 2021].

[12] R. Asaad. “An Investigation of the Neuronal Dynamics Under Noisy Rate Functions”. Thesis (M.S.), Eastern Mediterranean University, Institute of Graduate Studies and Research, Dept. of Computer Engineering, Famagusta. 2014: North Cyprus. http://hdl.handle.net/11129/1619

[13] G. Nguyen et al., "Machine Learning and Deep Learning frameworks and libraries for large-scale data mining: a survey", Artificial Intelligence Review, vol. 52, no. 1, pp. 77-124, 2019. Available: 10.1007/s10462-018-09679-z [Accessed 4 April 2021].

[14] D. Someshwar, D. Bhanushali, V. Chaudhari and S. Nadkarni, "Implementation of Virtual Assistant with Sign Language using Deep Learning and TensorFlow", 2020 Second International Conference on Inventive Research in Computing Applications (ICIRCA), 2020. Available: 10.1109/icirca48905.2020.9183179 [Accessed 4 April 2021].

[15] H. Lai and H. Lai, "Real-Time Dynamic Hand Gesture Recognition", 2014 International Symposium on Computer, Consumer and Control, 2014. Available: 10.1109/is3c.2014.177 [Accessed 4 April 2021].

[16] A. Das, M. Wasif Ansari and R. Basak, "Covid-19 Face Mask Detection Using TensorFlow, Keras and OpenCV", 2020 IEEE 17th India Council International Conference (INDICON), 2020. Available: 10.1109/indicon49873.2020.9342585 [Accessed 4 April 2021].

[17] B. Mohammed and H. Ahmad, "Advanced car-parking security platform using Arduino along with automatic license and number recognition", Academic Journal of Nawroz University, vol. 10, no. 1, p. 1, 2021. Available: 10.25007/ajnu.v10n1a996 [Accessed 3 April 2021].

[18] P. Kazarinoff, "Using Python to control an Arduino", Python for Undergraduate Engineers, 2021. [Online]. Available: https://pythonforundergradengineers.com/python-arduino-LED.html. [Accessed: 05- Apr- 2021].

[19] C. Liechti,"pySerial — pySerial 3.0 documentation", Pythonhosted.org, 2021. [Online]. Available: https://pythonhosted.org/pyserial/pyserial.html#overview. [Accessed: 05- Apr- 2021].