VOICE BASED SPEED AND DIRECTION CONTROL OF DC MOTOR

K.KUMARA SWAMY[1],MODALI SRIVALLI[2],M.LAKSHMI SHIVANI[3],P.AKSHAYA[4]
Assistant Professor[1], B.Tech students[234]
Dept of ECE,
TEEGALA KRISHNA REDDY ENGINEERING COLLEGE.

ABSTRACT

It is very difficult to work in hazardous environment in many of the industries. Human can survive only certain amount of humidity, temperature, pressure, etc. Working in environments like this will cause threat to human life, so precautions should be taken against this. To overcome this huge loss voice control was developed. Due to the advancement of wireless technology, there are several connections are introduced such as GSM, Wi-Fi and Bluetooth. Each of the connection has their own unique specifications and applications. The speed control was implemented using Bluetooth technology to provide communication access from smart phone. Communication plays a major role in day todays life and can be used as a better tool in control system. Motor plays an important role in many engineering applications. Engineers always search for an efficient and easy way to control these motors. Some many techniques are available in both AC and DC. Pulse width modulation is used often to control DC motor.Another interesting control is voice-based control. The Voice is recognized by the voice IC and the analog values are stored in the valve that is decoded to binary format and finally stored in IC. The microcontroller needs to be programmed to monitor the speed of the dc motor.When the speech is attained on the speech recognition using Bluetooth module, the valve checks and passes to the microcontroller, according to the program, the code mentioned stage of the pulse width is applied to the dc motor and now the speed is changed and rotates depending upon the signal that is applied to it. You can use the buzzer to indicate every time speed changes Overall this project can provide higher efficiency and smooth operations control for any industrial plant.

INTRODUCTION

The main attraction of any automated system is reducing human labor, effort and time. Home automation aims at automating the human lives. Activating the home appliances without conventional switch but by using a smart phone is known as home automation. Upcoming technology is natural language processing which enables us to command and control things with our voice. In modern era more importance is put on wireless technology. Due to wired networks are messy and complicated. These wireless technologies have great impact on human life in a positive manner and human development speed has increased. The main technologies used in home automation are GSM, Internet and Bluetooth. Each technology has its own merits and demerits. But Bluetooth based home automation systems have an upper hand. Devices can be connected from a range of 10m to 100m and this range can be increased. Also the frequency used for Bluetooth is 2.4GHz, which is available globally. The speed that can be fetched for Bluetooth services is up to 3Mbps. So these advantages made way for high development in Bluetooth based home automation. The primitive man realized that an effective way to communicate with one another is through voice. With minimum effort, ideas could be narrated with relative ease. When the first computers came around, achieving the level of sophistication so as to narrate commands using voice to a machine was

only realized in science fiction. However with tremendous breakthroughs in the field, we are at the precipice of truly using voice to interface with devices. Using this effective yet ingrained form of communication we would humanize technology to a great extent. Voice controlled House Automation System deploys the use of voice to control devices. Voice controlled House Automation System leverages the power of Arduino to provide a holistic voice controlled automation system. Using Natural Language Processing and the available hardware in most smartphones, it translates voice to be used for controlling electrical devices.

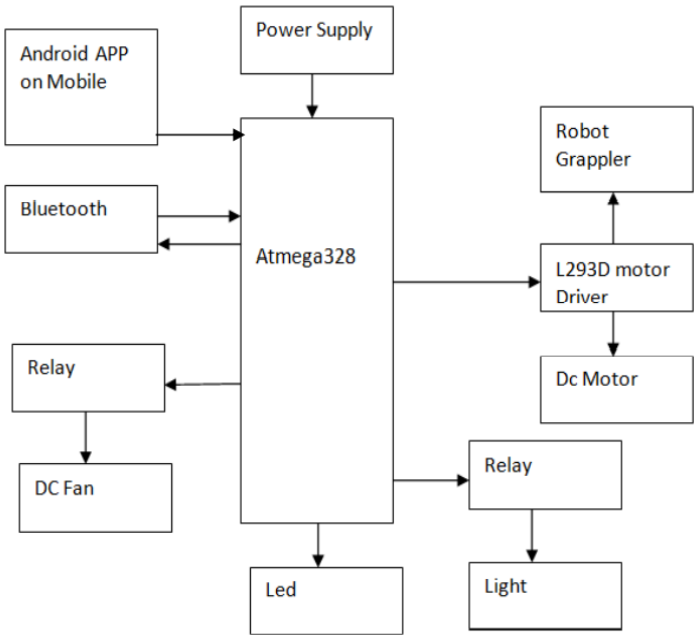

Block diagram

It describes about the home automation through voice recognition and user interface control. Both functions are carried out using a smartphone. The interfaces interact with each other using efficient Bluetooth wireless communication. End user control consists of a combination of google voice API and the AMR voice app which understands the voice commands. The Arduino Bluetooth control serves as the touch-based application with support for up to 8 devices.

PROPOSED SYSTEM CONFIGURATION

Robotization frameworks give a comprehensive use voice. Utilizing the dialect of innovation and equipment accessible in many cell phones, voice, electrical gadgets used to screen returns. Gadget controlling by switch or remote is old idea now. We can control any home apparatuses by utilizing our voice. The fundamental point of this venture is to control light, fan, AC and so forth utilizing human voice. The physically cripple individuals are not of working home machines utilizing their hands. This venture is extremely valuable for physically incapacitated/physically impair individual. They are skilled to work home machines by utilizing their voice. It can likewise be utilized for security reason after alteration for instance we can control entryway framework, or we can interface remote

camera and can control it utilizing our portable. The project aims at designing a prototype for controlling the home appliances that can be controlled wirelessly via an application that provides the features of speech recognition, video streaming, and switch mode. An application is run on android Device. The system can be used in wide range of areas. The system integrated with different features can be applied in the following fields. • The system can be used in home, small offices to the big malls The system can be used from home to offices to control the electrical Appliances. • For remote access of appliances in internet or intranet. The home/office appliances can be controlled in intra-network or can be accessed via internet. • For the development of technology friendly environment The system incorporates the use of technology and making smart home Automation. By the use of day-to-day gadgets, we can utilize them for different prospective.

Experimental prototype

By sending the input as a voice command using android mobile having a specific application ghost remote, then the input command is turned into text input and sent to Arduino via Bluetooth module. Then Arduino converts the text signal into PWM signal. This pulsating signal is converted into driving signal using driver circuit. The speed and direction of rotation of motor is done. In addition to this we have added a light, fan and robotic grappler which are also operated with the help of Bluetooth module and voice based instructions. By using a specific application named Bluetooth terminal in the android mobile, the entire data that is sensed by the sensors is retrieved to the android mobile.

ADVANTAGES

- Energy Efficient.
- •Automated performance.
- •No maintenance required.
- •Lower cost.
- •Fast acting.
- •Large grip force range.
- •Easy to implement custom fingers for application specific requirements.

APPLICATIONS

- Most of the current application of industrial robots are in manufacturing.
  The applications can be classified into following categories.
- Material handling :
  Moving materials or parts (e.g., machine loading and unloading)
- Processing operations:
  manipulating a tool (e.g., spot welding, spray painting)
- Assembly and inspection:
  It may involve moving parts or tools
- Smart Door System at your home and pass to enter your office.
- Automatic light, fan control.

CONCLUSION

The proposed project undertakes a viable solution the need of automation at the very basic level, that is, in our homes. The project will enable us to bring every appliance at every corner of our home under our control from a single point without having to get up and manually switch on or off the appliance. The use of a Bluetooth module assists the use of this system from various locations in our house. The system is further simplified by allowing appliances to be controlled by our voice. The user need not have to have to immense knowledge over the language of English. Just by saying the appliance name and the corresponding number assigned to that particular appliance, and telling it to switch on or off will enable the user to have complete control over any appliance without any effort. Android applications are very simple and user friendly allowing the user to understand its functionalities in very little time. Hence, the use of android application in this system allows a user to easily learn the process and get accustomed to the functions. Moreover, the entire system is very flexible and scalable. Any number of appliances can be added as and when required. Hence, the systems find use not only in houses but also in many offices where appliances such as fans or lights on multiple floors can be controlled by a person on any of the floors, saving manual labour and human effort to switch on or off the electronic appliances, thereby saving time. In addition, there have been many advertisements broadcasted by the Government of India promoting awareness to switch off household appliances when not in use and thus save electricity. Hence, such a project would assist the initiatives taken by the government, as most people forget to switch off home appliances and are too lazy to return and switch it off.

FUTURE SCOPE

In future, the system could use more concepts of Artificial Intelligence so as make it more user friendly and increase the automation. Another function that may be added is developing the system for different languages other than English.

REFERENCES

[1] Aml A. Arriany and Mohamed S.Musbah, “Applying Voice Recognition Technology for Smart Home Networks”, IEEE 2016

[2] Yash Mittal and Sonal Sharma, “A Voice-Controlled Multi-Functional Smart Home Automation System”, IEEE Indicon 2015

[3] Mohamed Abd El-Latif Mowad, Ahmed Fathy, Ahmed Hafez, “Smart Home Automated Control System Using Android Application and Microcontroller”, International Journal of Scientific & Engineering Research, Volume 5, Issue 5, May 2014.

[4] Alper Gurek, Caner Gur, Cagri Gurakin, Mustafa Akdeniz, Senem Kumova Metin, Ilker Korkmaz, “An Android Based Home Automation System”, 2013 10th International Conference on High Capacity Optical Networks and Enabling Technologies(HONET-CNS), December 2013.

[5] D.Naresh, B.Chakradhar, S.Krishnaveni, “Bluetooth Based Home Automation and Security System Using ARM9”, International Journal of Engineering Trends and Technology (IJETT), Vol. 4 Issue 9, September 2013.

[6] Thinagaran Perumal, Md Nasir Sulaiman, Khaironi Yatim Sharif, Abd Rahman Ramli, Chui Yew Leong, “Development of an Embedded Smart Home Management Scheme”, International Journal of Smart Home, Vol. 7, No. 2, March, 2013.

[7] Rashidi and D. Cook, “Keeping the Resident in the Loop: Adapting the Smart Home to the User,” IEEE Transactions on Systems, Man and Cybernetics, Part A: Systems and Humans, vol. 39, no. 5, pp. 949–959, Sep 2009.

[8] A. R. Al-Ali and M. Al-Rousan, "Java-based home automation system", IEEE Transactions on Consumer Electronics, vol. 50, no. 2, pp. 498-504, 2004.