CHARGING OF ELECTRIC VEHICLES BATTERY USING BIDIRECTIONAL CONVERTER

PARSHA RAMYA[1], V.PRASHANTH[2]

[1]M.Tech Student, Department Electrical and Electronics Engineering, Vinuthna Institute of Technology & Science, Hasanparthy (Mdl), Warangal, Dist, Hasanparthy, Telangana 506371
[2]Assistant professor, Department Electrical and Electronics Engineering, Vinuthna Institute of Technology & Science, Hasanparthy (Mdl), Warangal, Dist, Hasanparthy, Telangana 506371

Abstract *In this system the single-phase ac supplied to load. The non-linear load generates harmonics in the input signal. Enhanced phase locked loop (EPLL) provides sinusoidal current from distorted waveform. The charger is connected through this supply for charging the EV battery. The charger has two stage (a) 1- Ø bidirectional*

AC-DC converter (b) three-level DC-DC buck boost converter. The AC-DC converter provides DC-link voltage to 3-level buck boost converter. The electric vehicles battery is charged in buck mode for grid-to-vehicle application and discharge in boost mode for vehicle-to-grid application. This integration of bidirectional ac-dc converter with the proposed three-level bidirectional dc-dc converter provide path for the flow of power to determines the state of charge (SOC) of EV batteries for charging mode.

I. INTRODUCTION

Electric vehicles (EV) minimizes the concern related to environmental pollution and it's have better performance than the conventional IC-engine vehicles[1]. Plug in hybrid electric vehicles (PHEV) provides technology for charging the battery of vehicles at the home or at charging station in night and parking time of the vehicles [2]. Electrical vehicles have some limitation, so all people don't use it. Its limit are: high cost as compared to the fluid based vehicles, take more time to recharge, lack of much growth in battery infrastructure. Power electronics device has rectified lots of these problems. These devices used for designing the charging station of electrical vehicles and afterwardsthe charger architecture [3].

The electrical vehicles charging station is classified as DC and AC station. In DC station the converter installed within the station. The single phase charging station for domestic purpose and three phase for industrial uses. The ac source supplied to a linear and non-linear load. Non linear load such as power diode, power transistor, thyristor, metal oxide field effective transistor for high switching applications, isolated gate bipolar transistor (IGBT) for high voltage application based converters are widely used in various residential and industrial equipment. These different equipment generate the harmonics and reactive power [4].

The harmonics caused by non-linear load has been extracted in time and

frequency domain [5]. Between many harmonic extraction methods Enhanced Phase Locked Loop EPLL is best suited for real time application [6]. Electric vehicles charger is connected to this source for charging the battery. Conversion of AC-DC for battery storage system needs converter which is unidirectional and bidirectional. The bidirectional converter provides flow of power in both ways that is grid to vehicles and as of vehicles to grid. The 1- Ø bidirectional AC-DC converter gives non-regulated DC voltage [7]- [10]. This voltage is regulated by three-level DC-DC buck boost converter.

The advantages of three-level converter over the two-level converter is described as- It provides fast switching at high frequency application, the voltage stress across the switches is reduced and thus efficiency is improved, the value of passive elements such as inductor and capacitor is decreased by approximately 25%-70% and becomes cost effective, less conduction loss in switches [11]- [15]. The Introduction of this new type of load in existing power system with non-linearity nature of converter causes power quality issue and requires new load pattern. This power quality issue can be resolved by proper mitigation technique after identifying the problem [16]. The energy stored byelectric vehicles battery is electrochemically with DC supply.

The architecture of single phase charging station and power electronics converters as charger for electric vehicle battery are shown in fig 1. The design consideration of charger for electric vehicle is based on two components - (a) 1- Ø bidirectional AC-DC converter (b) three-level DC-DC buck boost converter. The integration of these two components are characterized to charge/ discharge of EV battery.

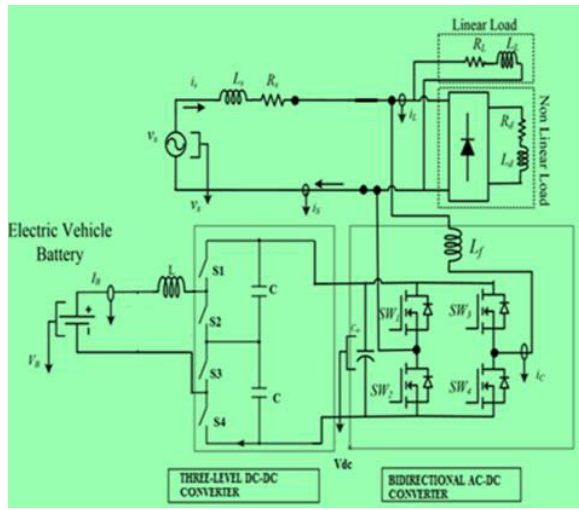

Fig 2: System configuration

II. BIDIRECTIONAL AC / DC CONVERTER

Basic Operation

Conversion of AC to DC is continuously increasing because of their use in wide range of applications such as electronic device use in domestic purpose, charging of battery, DC-drive application etc. In past the AC to DC converter uses only uncontrolled rectifier and line commutated rectifier.

The problem associated with this converter that the increase in firing angle causes decrease in power factor and introduces low order harmonics in line current. The single phase converter using four switches based on IGBT or MOSFET is become a first choice for highpower

application. It interfaces the ac side with dc side. The bidirectional ac-dc converter act as rectifier or inverter depending on the operation of four switches.

The rectifier mode converts ac input voltage into output dc voltage which is requirement of battery charging applications. In the inverter mode the battery delivers the power to grid and term as vehicles to grid (V2G) system. In the single phase battery charging application generally the full bridge converter is used at domestic purpose.

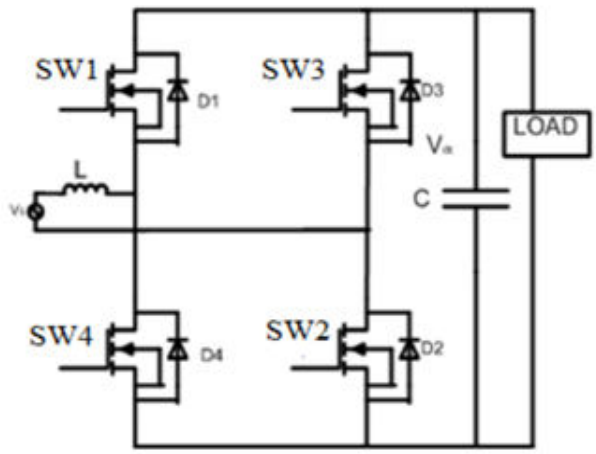

Fig 3: Single phase full bridge bidirectional AC DC converters

Control Scheme of Bi-Directional AC-DC Converter

In control strategy, the input voltage (Vs) and input current (Is), DC-link voltage(VDC) and load currents (IL) are used as control signals. Enhanced phase locked loop (EPLL) extracts the fundamental load current and generate the sinusoidal signal of input voltage for generation of gate pulse.

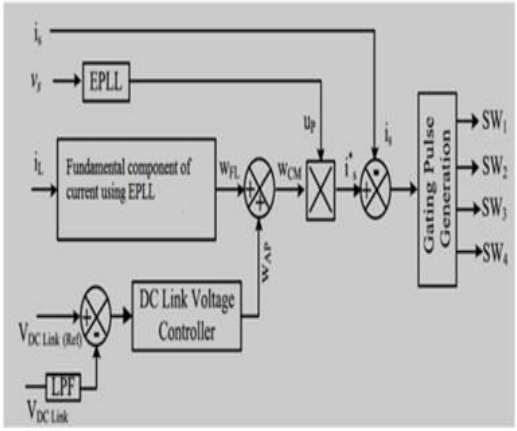

Fig 4: Block diagram for control strategy of VSC

III SOFTWARE USED

MATLAB

Matlab is a high-performance language for technical computing. The name mat lab stands for matrix laboratory. It integrates computation, visualization, and programming in an easy-to-use environment where problems and solutions are expressed in familiar mathematical notation. Typical uses include Math and computation Algorithm development Data acquisition Modeling, simulation, and prototyping Data analysis, exploration, and visualization Scientific and engineering graphics Application development, including graphical user interface building.

IV SIMULATION RESULTS

The prototype of the charging system has designed. System implementation and verification is done with the help of simulation.

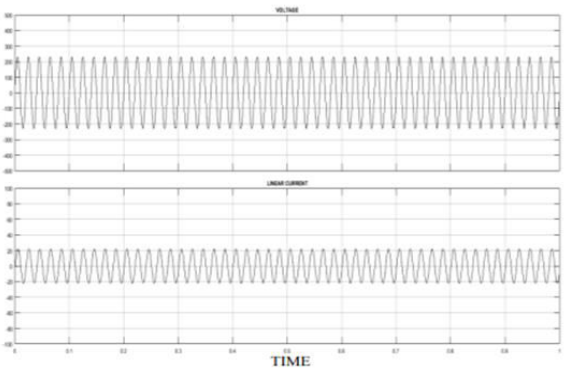

Fig 5: Supply voltage and current across linear load

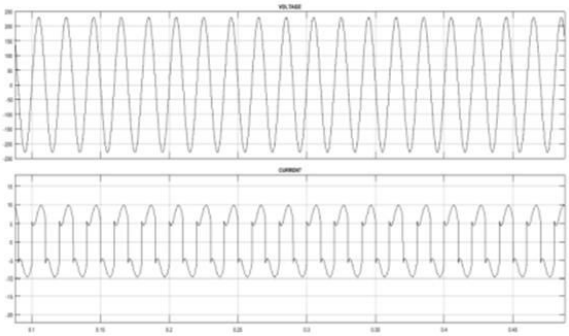

Fig 6: Supply voltage and current across Non linear load

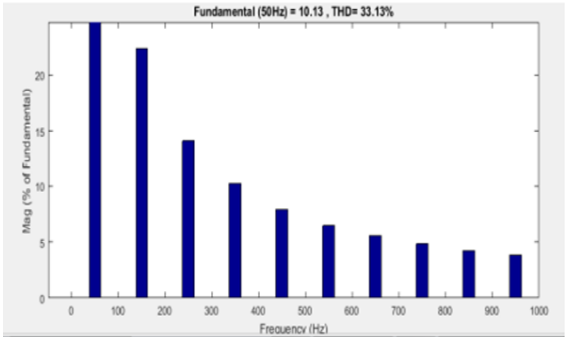

Fig 7: THD measurement without EPLL in non linear load

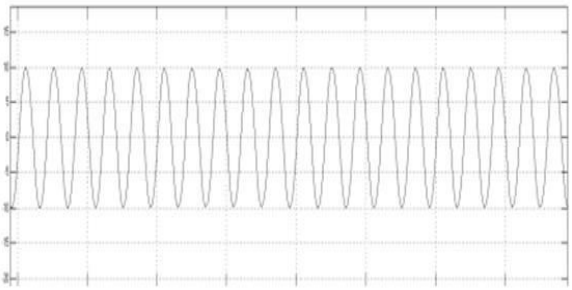

Fig 8: Fundamental component of non linear load by using EPLL

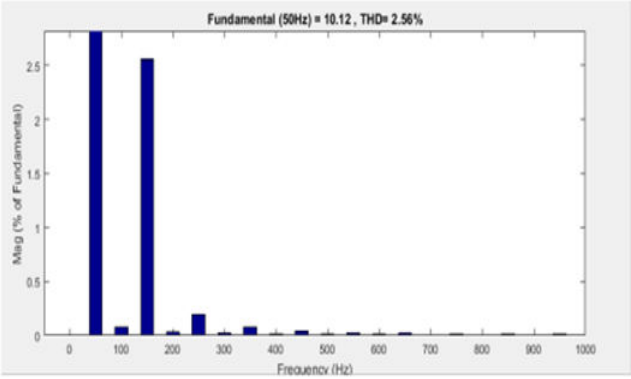

Fig 9: THD measurement without EPLL in non linear load

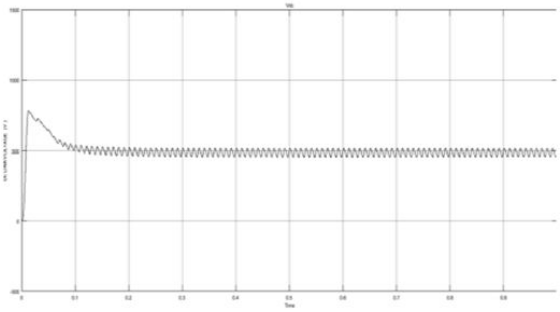

Fig 10: DC Link voltage

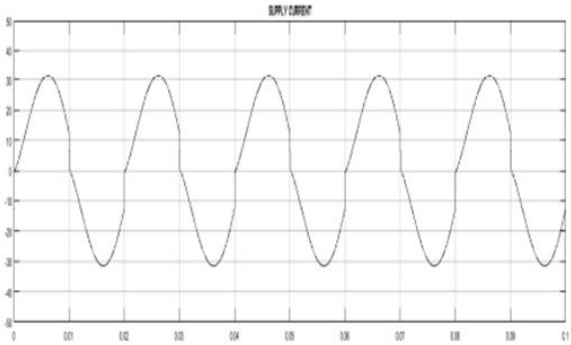

Fig 11: Supply current

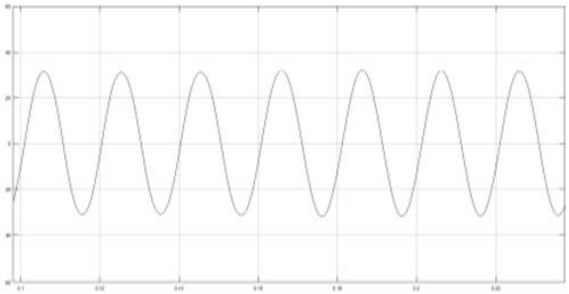

Fig 12: Fundamental component of supply current by using EPLL

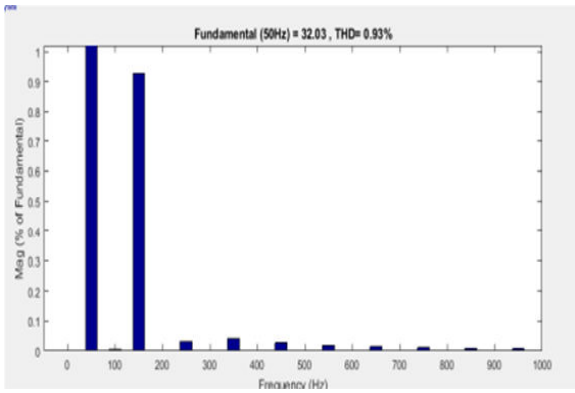

Fig 13: THD in supply current by using EPLL

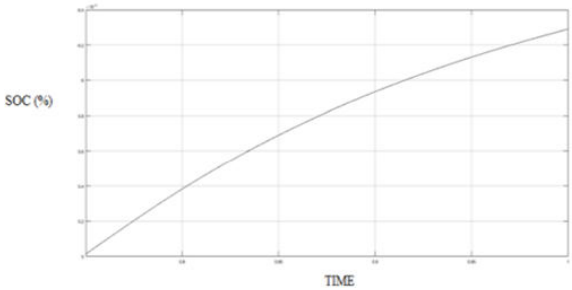

Fig 14: SOC of battery

V CONCLUSIONS

It can be analyzed from the simulation that the non-linear load introduces harmonics which results, distortion in waveform of supply current and load current. THD is measured at extracted fundamental current component whose value is 2.56 %, load current side and 0.93 %, supply current side. The bidirectional ac to dc and Three-level dc to dc converter for EV battery charging is presented for charger characterization. Single-phase bidirectional ac-dc power electronic converter using MOSFET has been presented for electrical vehicles charger.

The PWM strategy provides the switching operation in both rectifier and inverter mode and thus provide control of power in both direction and makes operation efficient. The DC link voltage is 505 V. The battery is charging in Buck mode operation of three-level dc-dc converter. The state of charge (SOC) shows that battery is charging from 0.005% to 0.0064 % in 1 sec. It means battery is charging 0.0014% in 1 sec. The simulation results are presented and dc-link voltage is estimated for interfacing the bidirectional power which is used for charging the vehicle battery

REFERENCES

[1]. E. Gubia, P. Sanchis, A. Ursua, J. Lopez, and L. Marroyo, "Ground currents in single-phase transformerless photovoltaic systems," in Progress in Photovoltaics: Research and Applications. New York: Wiley, pp. 629-650, Nov. 2007.

[2]. Gubía. E, Sanchis. P, Ursúa. A, López. J and Marroyo. L, “Ground currents in single-phase transformerless photovoltaic systems,” in Progress in Photovoltaics: Research and Applications. NewYork: Wiley, pp. 629-650, 2007.

[3]. O. Lopez et al. “Eliminating ground current in a transformerless photovoltaic application,” IEEE Trans. on Energy Conversion, vol. 25, no. 1, pp. 140–147, Mar. 2010.

[4]. D. Barater, E. Lorenzani, C. Concari, G. Franceschini, and G. Buticchi, “Recent advances in single-phase transformerless photovoltaic inverters,” IET Renew. Power Gener., vol. 10, no. 2, pp. 260–273, 2015.

[5]. W. Yu, 1. S. Lai, H. Qian, C. Hutchens, J. Zhang, G. Lisi, A. Diabbari, G. Smith and T. Hegarty, "High-efficiency inverter with H6-type configuration for photovoltaic non-isolated AC module applications," Proc. IEEE Appl. Power Electron. Conf. Expo., pp.1056 -1061, Feb. 2010.

[6]. N. Kasa, H. Ogawa, T. Iida, and H. Iwamoto, “A transformerless inverter using buck-boost type chopper circuit for the photovoltaic power system,” in Proc. IEEE Int. Conf. Power Electron. Drive Syst., 1999, pp. 653–658.

[7]. S. Jain and V. Agarwal, “A single-stage grid-connected inverter topology for solar PV systems with maximum power point tracking,” IEEE Trans. Power Electron., vol. 22, no. 5, pp. 1928–1940, Sep. 2007.

[8]. B. S. Prasad, S. Jain, and V. Agarwal, “Universal single-stage gridconnected inverter,” IEEE Trans. Energy Convers., vol. 23, no. 1, pp. 128–137, Mar. 2008.

[9]. H. Patel and V. Agarwal, "A single-stage, single-phase transformerless doubly grounded grid-connected PV interface," IEEE Trans. Energy Conversion, vol. 24, pp. 93–101, Mar. 2009.

[10]. Y. Tang, X. Dong, and Y. He, “Active buck-boost inverter,” IEEE Trans. Ind. Electron., vol. 61 no. 9, pp. 4691–4697, Sep. 2014.

[11]. P. Chamarthi, M. Rajeev, and V. Agarwal, “A novel single-stage zero leakage current transformerless inverter for grid-connected PVsystems,” in Proc. IEEE 42nd Photovolt. Spec. Conf., New Orleans, LA, USA, Jun. 2015, pp. 1–5.

[12]. N. V´azquez, M. Rosas, C. Hern´andez, E. V´azquez, and F. J. Perez-Pinal, “A new common-mode transformer-less PV inverter,” IEEE Trans. Ind. Electron., vol. 62, no. 10, pp. 6381–6391, Oct. 2015.

[13]. T. Sreekanth, N. Lakshminarasamma, and M. K. Mishra, “A single-stage grid-connected high gain buck-boost inverter with maximum power point tracking,” IEEE Trans. Energy Convers., vol. 32, no. 1, pp. 330–339, Mar. 2017.

[14]. A. Kumar and P. Sensarma, “A four-switch single-stage single-phase buck-boost inverter,” IEEE Trans. Power Electron., vol. 32, no. 7, pp. 5282–5292, Jul. 2017.

[15]. V. Gautam and P. Sensarma, “Design of Cuk-derived transformer-less common-grounded PV micro-inverter in CCM,” IEEE Trans. Ind. Electron., vol. 64, no. 8, pp. 6245–6254, Aug. 2017.

[16]. T. Sreekanth, N. Lakshminarasamma, and M. K. Mishra, “A single-stage grid-connected high gain buck-boost inverter with maximum power point tracking,” IEEE Trans. Energy Convers., vol. 32, no. 1, pp. 330–339, Mar. 2017.