IOT BASED UNDERGROUND CABLE FAULT DISTANCE AND FAULT LOCATION

G.Veda Vandana [1], Abdul Subhani Shaik [2]

[1]PG Scholar, Department of ECE, CMR College of Engineering and Technology (UGC Autonomous) Kandlakoya, Hyderabad, Telangana, India.

[2] Associate Professor, Department of ECE, CMR College of Engineering and Technology (UGC Autonomous) Kandlakoya, Hyderabad, Telangana, India.

ABSTRACT

The main aim of the project is to design an under ground cable fault detection and location identification with distance in LCD and IOT using microcontroller. Earth fault or leakage of current is a very common problem in under ground cable circuits. This leads to unnecessary power loss. The purpose of this project is to develop a system that senses the earth fault in the cables and alerts the user about it with distance The line to line fault and the open circuit faults are identified based on the voltage drops occurred at the lines. The system also calculates the distance of the fault occurrence and the location with fault type can be identified exactly. Upon identification of fault it operates a Relay. The microcontroller based control system continuously monitors the amount of voltage passing through the power supply circuit. In case of fault, the amount of voltage will be dropped in the circuit. In such situations the microcontroller-based system alerts the user about this in the form of text message displayed on LCD and IOT along with the distance. The system also alerts through buzzer alarm. The microcontroller is programmed using embedded C language.

Keywords: Cable Fault Detection, IOT, Arduino, Buzzer, LCD.

1. INTRODUCTION

The basic aim of this project model is to detect the precise location of underground cable fault from the bottom station using an Arduino board. Normally we use overhead lines. We can simply detect the faults but in rushed places or cities we couldn't use overhead lines. So, we are using underground cables. Underground cables are used mostly in urban areas rather than overhead lines. The underground cable is a vital one for distribution especially in metropolitan cities, airports, and defense services because underground cables aren't suffering from weather conditions like snowfall, heavy rainfall, storm. But when any fault occurs in cable, then it's difficult to search out out the fault. Underground cables are prone to a wide variety of faults due to underground conditions, wear and tear, rodents etc. Also detecting fault source is difficult and entire line is to be dug in order to check entire line and fix faults. So here we propose an cable fault detection over IOT that detects the exact fault position over iot that makes repairing work very easy. The repairmen know exactly

which part has fault and only that area is to be dug to detect the fault source. This saves a lot of time, money and efforts and also allows to service underground cables faster. We use IOT technology that allows the authorities to monitor and check faults over internet. The system detects fault with the help of potential divider network laid across the cable. Whenever a fault gets created at a point shorting two lines together, a specific voltage gets generated as per the resistors network combination. This voltage is sensed by the microcontroller and is updated to the user. The information conveyed to the user is the distance to which that voltage corresponds to. The microcontroller retrieves the fault line data and displays over LCD display, also it transfers this data over internet to display online. We use IOTGecko to develop the online system that links with the system to display the cable faults online.

The Internet of Things is an infrastructure that includes physical devices, modern vehicles, Underground cables have been widely used with the development of power system grid. Till last decades cables were made to lay overhead & currently it is to lay underground which is superior to earlier method. Because the underground cable are not affected by any adverse weather condition such as storm, snow, heavy rainfall as well as pollution. But when any fault occur in underground cable, then it is difficult to locate the exact location of fault. Today the world is become digitalized so this paper is intended to detect the location of fault in digital way. The underground cable system is more common practice followed in many urban areas. While faults can occur for different reason in cableline, the repairing process related to that particular cable is difficult due to not knowing the exact location of cable fault. As it is very difficult to find the exact location or faulty location maually, which suddenly affects the efficiency of the cable wire due to losses occurred. Nowadays many techniques had already been implemented in order to detect cableline fault. But the problem came up is how to detect fault in cable wire when it is under grounded, and how to access or retrieve those data related to faulty location whenever it is required. In order to fill those gaps, we proposed the system which detects the exact location of the fault and through the means of IoT it's serially communicated towards server.The project "IoT based underground cable line fault detection system "is used for find out and locating the faults. The manual method is very time consuming. Here, we propose a cable fault detection over IoT that detects the exact fault position over IoT that makes repairing work very easy. For most of the worldwide operated low voltage and medium voltage distribution lines underground cables have been used from many decades. The complexity of the whole network comprises numerous components that can fail and interrupt the power supply for the end user. Use of underground power cable is expanding due to safety considerations and enhanced reliability in transmission and distribution in recent times. Due to safety reasons and high power requirements use of underground cables has been increased. To increase the reliability of the system proper fault detecting and locating techniques are required. The inaccessibility of the underground cable makes the location and detection of fault in the cable a challenging task. The fault detecting and locating techniques play a very important role in maintaining the system and thereby increasing the reliability.

2. LITERATURE SURVEY

Literature survey earlier to begin a research project is essential in understanding fault in underground cable lines, as this will supply the researcher with much needed additional information on the methodologies and technologies available and used by other research complement around the world. Dhivya Dharani.A, Sowmya.T[1,2] the paper titles as—Development of a Prototype Underground Cable Fault Detector‖ —Cable faults are damage to cables which affects the resistance in the cable. If allowed to persist, this can lead to a voltage breakdown. To locate a fault in the cable, the cable must first be tested for faults. This prototype uses the simple concept of OHMs law[3]. The current would vary depending upon the length of fault of the cable. This prototype is assembled with a set of resistors representing cable length in Kilo meters and fault creation is made by a set of switches at every known Kilo meters (km's) to cross check the accuracy of the same. The fault occurring at what distance and which phase is displayed on a 16X2 LCD interfaced with the microcontroller. The program is burned into ROM of microcontroller[4]. The power supply consists of a step down transformer 230/12V, which steps down the voltage to 12V AC. This is converted to DC using a Bridge rectifier. The ripples are removed using a capacitive filter and it is then regulated to +5V using a voltage regulator 7805 which is required for the operation of the microcontroller and other components. Nikhil Kumar Sain, Rajesh Kajla [5] paper titled as —Underground Cable Fault Distance Conveyed Over GSM. This paper proposes fault location model for underground power cable using microcontroller. The aim of this project is to determine the distance of underground cable fault from base station in kilometers. This project uses the simple concept of ohm's law. When any fault like short circuit occurs, voltage drop will vary depending on the length of fault in cable, since the current varies[6]. A set of resistors are therefore used to represent the cable and a dc voltage is fed at one end and the fault is detected by detecting the change in voltage using analog to voltage converter and a microcontroller is used to make the necessary calculations so that the fault distance is displayed on the LCD display. R.K.Raghul Mansingh, R.Rajesh, S.Ramasubramani, G.Ramkumar [7] titled as —Underground Cable Fault Detection using Raspberry Pi and Arduino‖- The aim of this project is to determine the underground cable fault[8]. This project uses the simple concept of CT Theory. When any fault like short circuit occurs, voltage drop will vary depending on the length of fault in cable, since the current varies CT is used to calculate the varying. The signal conditioner manipulates the change in voltage and a microcontroller is used to make the necessary calculations so that the fault distance is displayed by IOT devices[9]. This project is to determine the distance of underground cable fault from the bottom station in kilometres and displayed over the internet.Underground cable system is a typical followed in major areas in Metro cities. While a fault occurs for a few reason, at that point the fixing process associated with that specific cable is difficult because of exact unknown location of the fault within the cable.This Technology is used to search out out the precise location of the fault and to send data in graphical format to our website employing a GSM module at the identical time it display on the LCD screen[10].This project is to see the gap of underground cable fault from the bottom station in kilometres and displayed over the net. Underground cable could be a common followed in major

areas in Metro cities. While a fault occurs for a few reason, at that point the fixing process associated with that exact cable is difficult because of exact unknown location of the fault in the cable[11]. This Technology is employed to seek out out the precise location of the fault and to send data in graphical format to our website employing a GSM module at the identical time it display on the LCD screen. The project uses the quality theory of Ohms law, i.e., when an occasional DC voltage is applied at the feeder end through a series resistor (Cable lines),then the present would vary depending upon the situation of the fault within the cable because the resistance is proportional to the distance. just in case there's a brief circuit (Line to Ground), the voltage across series resistors changes in keeping with the resistance that changes with distance .This is then fed to an ADC to develop precise digital data which the programmed microcontroller of the 8051 family displays in kilometers[12].

3. EXISTING SYSTEM

This existing system is work with manual interference and has many limitations. To avoid that limitations and make system high effective we integrate the with Fault switches and wireless technologies for easier and effective.

4. PROPOSED SYSTEM

The operation of the system states that when the current flows through the fault sensing circuit module the current would vary depending upon the length of the cable from the place of fault that occurred if there is any short circuit fault with the Single Line to ground fault, or double line to ground fault, or three phase to ground fault. The voltage drops across the series resistors changes accordingly and then the fault signal goes to internal ADC of the microcontroller to develop digital data. Then microcontroller will process the digital data and the output is being displayed in the LCD connected to the microcontroller in kilometres and phase as per the fault conditions. This Output is also displayed in the webpage through the IoT Wi-Fi Module ESP8266 connected to the system.

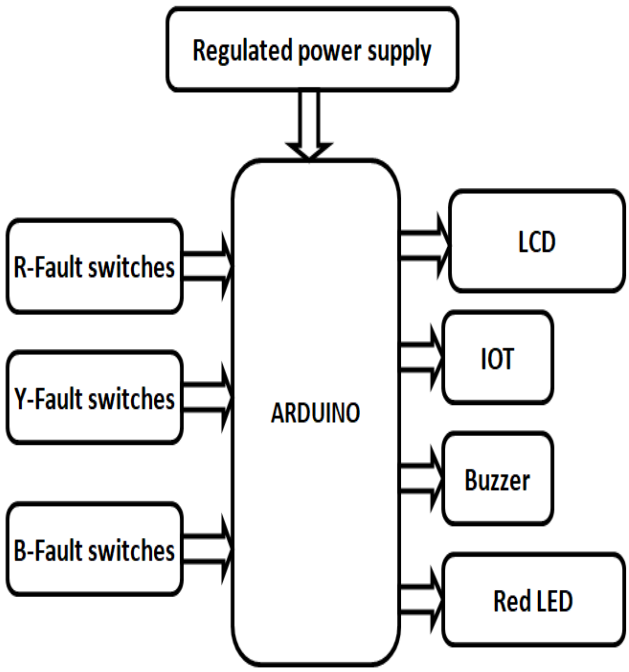

Fig.1.Block diagram

schematic diagram and interfacing of ARDUINO microcontroller with each module is considered. The above schematic diagram is pin configurations are demonstrated as RPS interfased to 7th and 20th pin(ie, VCC and AVCC) of micro controller. 16*2 LCD displays it is used for displaying status of the Robot. Data pins of LCD D4, D5, D6, D7 are connected to D4, D5, D6, D7 digital pins of Arduino respectively.

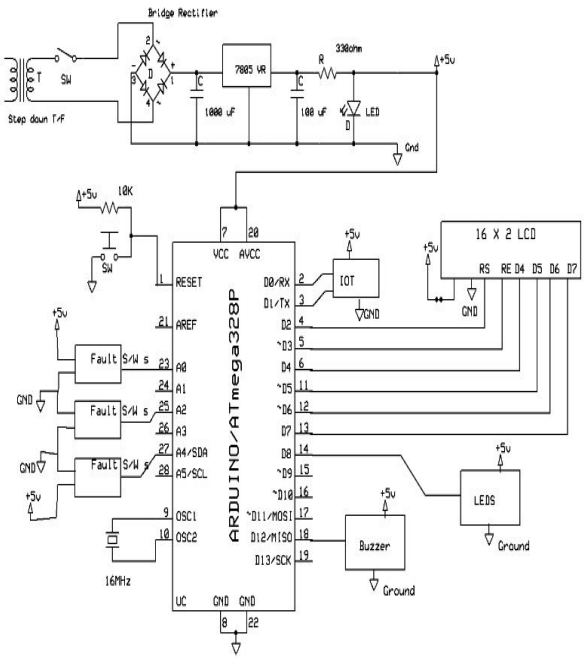

Fig.2. Schematic diagram

The main aim of the project is finding the faut distance locatipn where the occurred for this we used 3 fault switches those are connected to the ARDUINO micro controller. When the corresponding fault switches activated corresponding distabce for fault location identified through buzzer as well as IOT.The power supply given to the system is 230V ac supply. This 230 V supply is fed to the two Adapter Modules (12 V, 2 Amps. each). The adaptor module 1 and 2 converts the AC voltage to DC. The ripple in output of adaptor module 1 is then removed with the help of a 1000 microfarad electrolytic capacitor. Since a constant 5 V voltage source is desired for our system, because the Microcontroller (ATmega328), 16x2 LCD (Liquid Crystal Display), Fault Sensing Circuit Module [9] , IoT Wi-Fi Module[10], etc. and the other components work at 5V supply, hence we are using three voltage regulators (7805). These voltage regulators convert the filtered output to 5V constant supply voltage.

5. FUNCTIONAL MODULES

A. Regulated Power Supply:

Regulated power supply is used to produce the required operating voltage for this proposed system. Normally this system is converts 230V ac voltage to the required 12V dc voltage for system operation. In this project we use 12 v batteries to operate and use RPS to charge the battery.

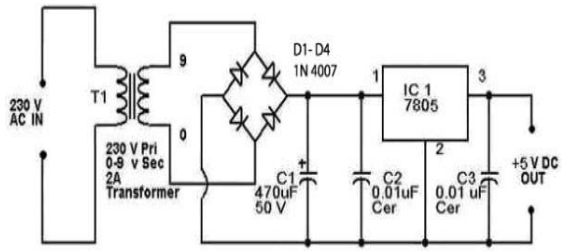

Fig.3. Regulated Power Supply

B. Arduino Microcontroller

Arduino UNO R3 SMD is the open source Embedded Development board launched by Arduino based on Atmega328 SMD Package Microcontroller. Because Atmel is moving more and more of their production capacity to surface mount ICs, the DIP packaged ATmega is becoming more and more difficult to get. To keep up with demand, we now offer the Arduino Uno R3 with an SMD ATmega. The board is identical to the PTH version of the Uno, but you won't be able to remove the ATmega without some hot-air.

Fig.4. Arduino Controller

C. LCD Monitor:

We proposed 16*2 LCD modules for display the status of the working agriculture robot system. This LCD modules normally having 16 pins in that we used 6 data pins to display content which is transferred from microcontroller. Robot every status will displayed in this LCD module.

Fig.5.16X2 LCD

D. Buzzer

Buzzer is the output module for alerting of any parameter changes. if any sensor increases the threshold value or if increases then micro processor alert us by using this system.

Fig.7. Buzzer

E. IOT- Module:

Internet of things module or ESP8266 module we used to control the agriculture robot with local server design. Wi-Fi frequency based we operate this agriculture system. This IOT module can transfer the data upto 200 meters. Using local server we control this iot based agri system.

Fig.8. ESP 8266

F. Fault Switches:

Fault switches is a SPDT Slide Switch An electronic switch is an electronic component or device that can switch an electrical circuit, interrupting the current or diverting it from one conductor to another. Adding another pole to the SPDT creates a Single Pole, double-throw (SPDT) switch. One side of switch acts as ON mode and another side of switch act as OFF mode.

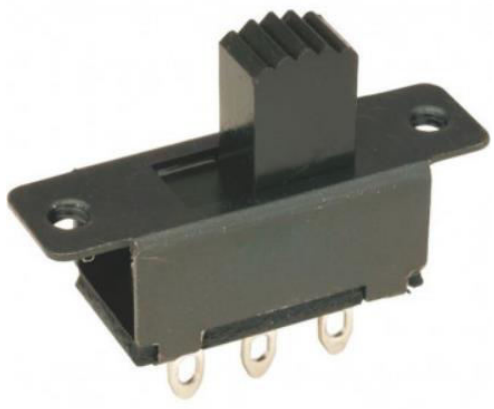

Fig.9. Fault Switch

6. RESULTS AND DISCUSSION

In this project we have built a underground cable fault detection with fault switches and hardware are successfully interfaces with the microcontroller. The get alerts through wi-fi module.

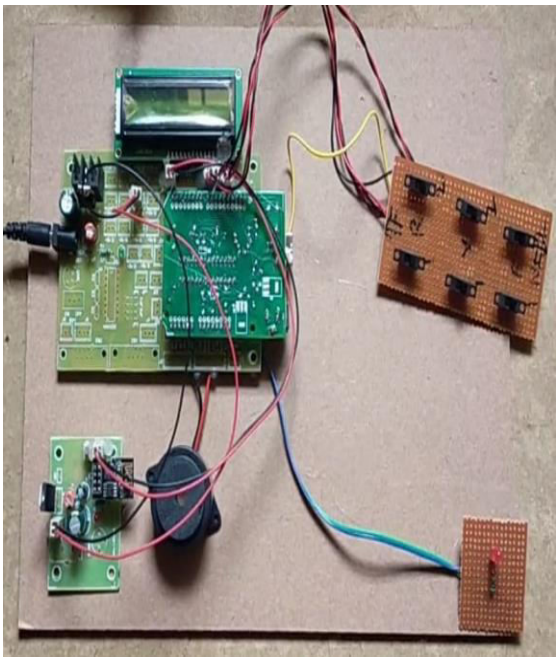

Fig.9. Hardware setup

Fig.10. data displayed on LCD

We used 16*2 LCD module which is getting everything status of the project on LCD. Title of the project, when there is nor faults it show R Y B as NF means no faults detected. When there is a fault it displayed that fault type along with fault distance on LCD.

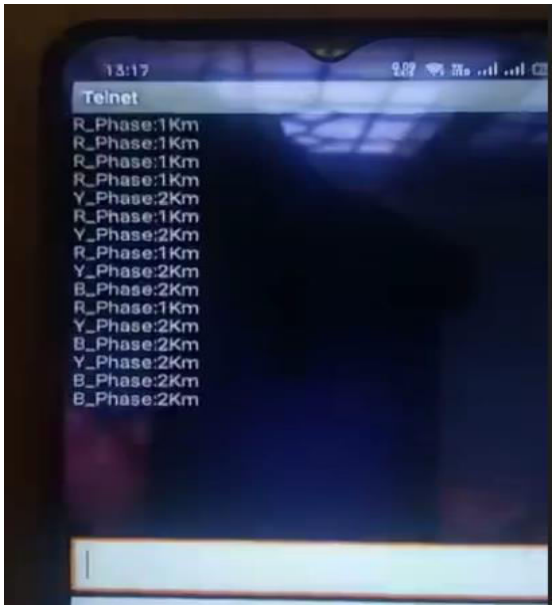

Fig.11. TELNET IOT App

IOT technology is used to send the data for longer distances. Here we used TELNET Application for storing the fault details. When the fault occur wifi module send the data to local server and it post into telnet application for wireless fault alert as type and distance.

7. CONCLUSION

IOT based Underground cable fault detection was done and the fault occurs in cable was display in terms of distance from the base station in kilometers. Circuit can be tested with creating fault manually with the help of switches. Here we used resistors in place of the cables to simulate various fault conditions. In this project we can detect fault if the distance is greater than 1km up to 2km.When fault is occurs the fault switches are operated then the phase related to that particular switch is considered as the faulty phase. So, the faulty section can easily be detected. We developed the prototype model and in future the same can be implemented to product level. For any product to be cost effective user friendly and compact. In future we can usethe capacitance to measure the open circuit fault occur in cables.The work automatically displays the phase, distance and time of occurrence of fault with the help of ARDUINO and ESP8266 Wi - Fi module in a webpage. The benefits of accurate location of fault are fast repair to revive back the power system, it improves the system performance, it reduces the operating expense and the time to locate the faults in the field.

REFERENCES

[1]. Clegg, Underground Cable Fault Location. New York: McGraw- Hill, 1993

[2]. Manish Paul, Raj Kamal Kakoti, 'Underground Cable Fault Locator', IARJSET, Vol.3, Issue 9, September 2016.

[3]. M.S. Choi, D.-S. Lee, and X. Yang, "A line to ground fault location algorithm for underground cable system," KIEE Trans. Power Engg., pp. 267-273, Jun. 2005.

[4].Atmel-8271-8-bit-AVR-Microcontroller-ATmega48A-48PA-88A-88PA-168A-168PA-328-328P_datasheet_Complete, Microchip.

[5]. Nikhil Kumar Sain, Rajesh Kajla, Mr.Vikas Kumar, “Underground Cable Fault Distance Conveyed Over GSM”, IOSR-JEEE, Volume 11, Issue 2 Ver. III (Mar. – Apr. 2016).

[6]. C. Bascom, "Computerized Underground Cable Fault Location Expertise", Transmission and Distribution Conference, 1994, Proceedings of the 1994 IEEE Power Engineering Society.

[7]. Tarlochan, Sidhu, S. Xu, Zhihan, "Detection of Incipient Faults in Distribution Underground Cables", IEEE Transactions on Power Delivery, Vol. 25, No.-3, July 2010.

[8]. Darvhankar G.S, Gharpande A.S, Bhope S.D, Meshram A.S, Bobad A., “Study of 3-phase Underground Cable Fault Locator Using Acoustic Method”, I.J.A.E.R.D., Vol. 2, Issue 1, Jan. 2015.

[9]. Tanmay Kedia, Vinita Sahare, Kanchan Kumar Bauri,Rajendra Kumar Sahu, Sanjeev Kumar, Abhijeet Lal, "Underground Cable Fault Distance Detector using ATMega328 Microcontroller", IJAREEIE, Vol.6, Issue 10, October 2017.

[10]. Mr. N. Sampathraja, Dr. L. Ashok Kumar, Ms. V. Kirubalakshmi and Ms. C. Muthumaniyarasi, Mr. K. Vishnu Murthy, “IoT Based Underground Cable Fault Detector”, IJMET, Volume 8, Issue 8, August 2017.

[11].Byoung-Hee Lee, Ki-Bum Park, Chong-Eun Kim, “No-Load Power Reduction Technique for AC/DC Adapters”, IEEE Transactions on Power Electronics, Volume: 27, Issue: 8, Aug. 2012

[12] S. Ijaz, M. A. Shah, A. Khan, and M. Ahmed, “Smart cities: A survey on security concerns,” Int. J. Adv. Comput. Sci. Appl., vol. 7, no. 2, pp. 612–625, 2016. accessed on Apr. 2017.[Online].Available: https://arxiv.org/abs/1703.07079