POWER FACTOR CORRECTION OF THREE-PHASE PWM AC CHOPPER FED INDUCTION MOTOR DRIVE SYSTEM USING HBCC TECHNIQUE

DR.CHANDRASHEKHAR REDDY S[1] , G.SARITHA[2] , Y RAJESH[3]

1 Professor, Department of EEE, CHRISTU JYOTHI INSTITUTE OF TECHNOLOGY AND SCIENCE, Jangaon in place of warangal, Telangana, India.

2 Assistant Professor, Department of EEE, CHRISTU JYOTHI INSTITUTE OF TECHNOLOGY AND SCIENCE, Jangaon in place of warangal, Telangana, India.

3PG Scholar, Department of EEE, CHRISTU JYOTHI INSTITUTE OF TECHNOLOGY AND SCIENCE, Jangaon in place of warangal, Telangana, India.

ABSTRACT:

This thesis indicates a modern manage technique using hbcc and fuzzy present day technology for a three-level pulse width inflection (PWM) air con chopper provided induction motor (IM) manage tool. Correcting the enter energy variable (PFC) of the IM force gadget underneath various operating situations is a key goal of the recommended manipulate regimen. PFC is done via again and again applying the 3-segment supply currents, that are produced by combining the supply voltages and the hysteresis-band-current (HBCC) method in phases. The suggested manage approach has each inner and outside loopholes. The length of the referral current provided via either the velocity controller or the initialization controller is the end result of the outer loophole, while the air con chopper PWM indicators are the end result of the interior loophole. Four IGBTs with simplest PWM gate indicators, which are less energetic semiconductor buttons, are recommended for the air con chopper. As a end result, the cautioned approach is easy, effective, extraordinarily effective, and low in cost. MATLAB/SIMULINK has been used to set up and verify the IM power device.

Keywords: IM, PFC, IGBT, HBCC, PWM, Matlab.

I INTRODUCTION:

The use of air con voltage control devices, often called air conditioning voltage controllers, includes controlled AC voltage. These packages consist of pace modulation and gentle starter for induction electric vehicles, residential and industrial ventilation, and lighting switches with dimmer circuits [1], [2]. Numerous typologies with various manage strategies for these regulators are defined in both unmarried action and three stage programs. The root imply rectangular (RMS) price of the loading circuit output is modified by using the air con voltage controller. Three manage strategies are available to acquire this objective: the ON/OFF approach, the section attitude method (PA), and the heartbeat width inflection method (PWM). All 3 manipulate mechanisms may be used in both single-section and three-section executions. Thyristors, or silicone-controlled solutions, are used as electricity switches for the non-stop connection and disconnection of the tonnes circuit to/from the AC voltage supply within the ON/OFF manipulate machine. Relationship advanced for the duration of the following feeding voltage cycles for a number of thing cycles earlier than disconnecting. The output voltage of the RMS is affected by converting the wide variety of gaps that are closed and also blocked. When silicone-controlled rectifiers (SCRs) are switched on at zero voltage and switched lower back to 0 voltage within the ON/OFF method, the related harmonics are minimized. However, undesirable sub-harmonic components could be produced [3].

Home heating and temperature controllers are the handiest packages for this system because of the strength deliver gap at low call for levels. By converting the SCR's capturing angles, the manipulate technique regulates the performance of the AC voltage

controller. Three-phase manipulate gadgets characteristic 3 sets of SCRs, while the strength circuit of a single-section PA control regulatory authority generally incorporates two thyristors attached between the air con source and the plenty tool. Images [4] and [5] display the smooth place to begin of an induction electric motor (IM) powered through a thyristorized voltage controller. By adjusting the thyristor taking pictures angles at some operating quotes as well as torque controls, artificial strategies are used to trade the engine voltage. [6] gives a tension ramp approach for beginning an AC electric motor. By changing the SCR's capturing angles at some stage in initialization, the voltage is markedly extended in the ramp technology. A closed loophole modern manage method is presented in [7, [8], and it specifies the firing angles of the thyristors needed to preserve the engine existing at begin-up straight away interior a limit fee. With these techniques, the IM launches without any hiccups. These controllers are sophisticated and also pricey in view that they require several sensing devices and zero crossing detection circuits (ZCD). Additionally, even supposing the lot is a pure repellent, the transistorized AC voltage controller employs a decrease PF and generates loads of harmonics. Modern strength semiconductor switches like MOSFETs and IGBTs can replace SCRs thanks to present day-bearing semiconductor buttons. With present day electricity-converting PWM control techniques, the effectiveness of the air conditioner's voltage regulating authorities may be increased in phrases of harmonics, filter range, input PF, and voltage manipulate range.

PROPOSED SYSTEM:

In this article, new control strategy for PFC of three phase PWM AC chopper using HBCC technique

fed three phase squirrel cage IM with soft starting and speed control operating modes is proposed. The power circuit of the proposed control strategy is simple, reliable, high efficiency and low cost as it has reduced number of power semiconductor switches. The three phase PWM AC chopper consists of four IGBTs. A new closed-loop control strategy, that uses only two gate pulses to drive the four IGBTs, is achieved. The proposed control strategy has three main control objectives: soft starting, speed control and input PFC, which are achieved by adjusting the RMS value of the input voltage fed the IM terminals. The proposed control strategy is investigated, analysed and simulation results are obtained under different testing conditions. A laboratory prototype model is implemented based on the proposed control strategy. The experimental setup consists of a 1.5 HP squirrel cage IM coupled mechanically with a DC generator for loading purpose, a fourswitch PWM AC chopper and a DSP DS-1104 control board. The experimental waveforms are obtained and compared with corresponding simulation waveforms. The rest of the article is organized as: first, description and operating modes of the proposed control strategy is discussed. Then, mathematical analysis of the proposed control strategy is introduced. Finally, the simulation and laboratory waveforms are collected and the article findings are concluded.

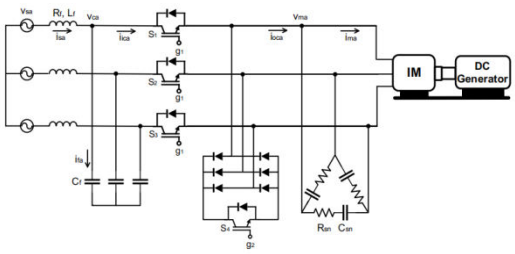

The proposed control strategy has three main control objectives: soft starting, speed control, and input power factor correction (PFC). This strategy is depending on the control of the applied voltage across IM terminals using AC chopper. Fig

illustrates the schematic diagram of the proposed control strategy. It has two control loops. The inner control loop uses HBCC to force the chopper actual current signals to track their command current signals to achieve input PFC, whereas the outer control loop determines the magnitude of the reference currents either from starting mode or speed control mode. As a result, the inner loop controls the phase and the outer loop controls the magnitude of the chopper currents. In the first, the soft starting mode is working, and by giving a switching pulse to the selector switch, the speed control mode is activated and the soft starting mode is turned off.

The suggested AC chopper is replaced, and a test model is run in the MATLAB/Simulink environment. The simulation was used to maybe verify the suggested control method. Checks are made on three research cases. Results from simulation and analysis are correctly gathered and contrasted. In the appendix, the tool settings under investigation are listed.

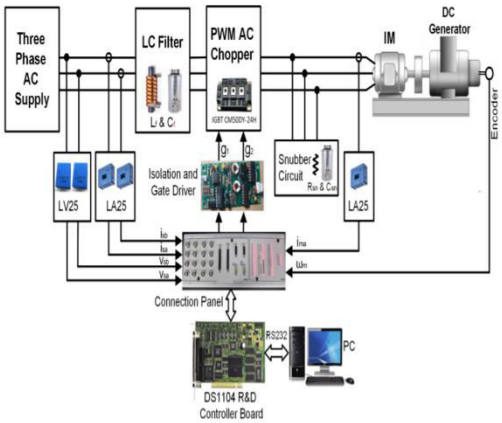

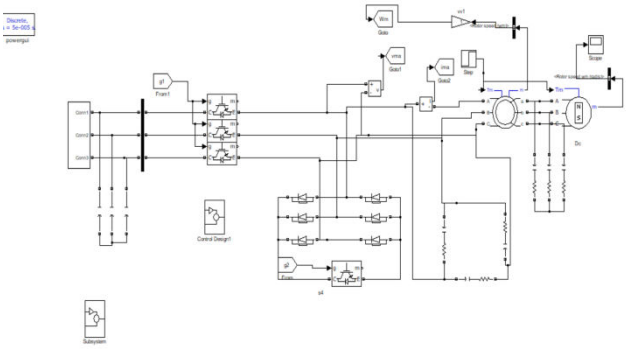

Fig.7 Simulation circuit.

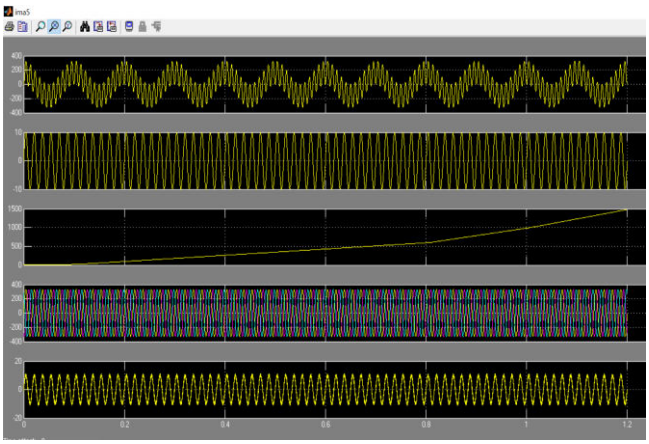

Fig.8 PFC of the drive system during start-up of the IM.

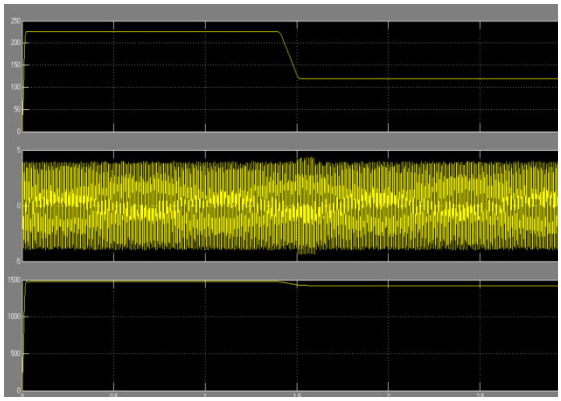

Fig.9. Variation of the motor speed, current and phase voltage at activation of the speed controller.

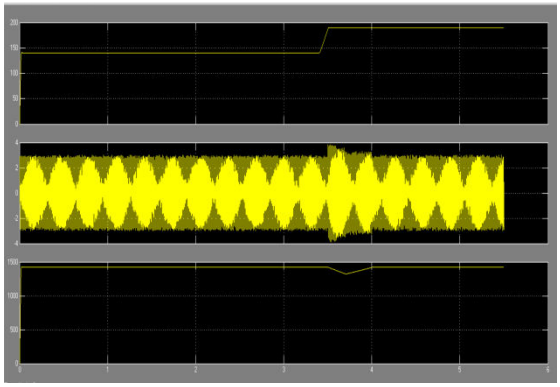

Fig.10. Variation of the motor speed, current and phase voltage at step change in the load torque.

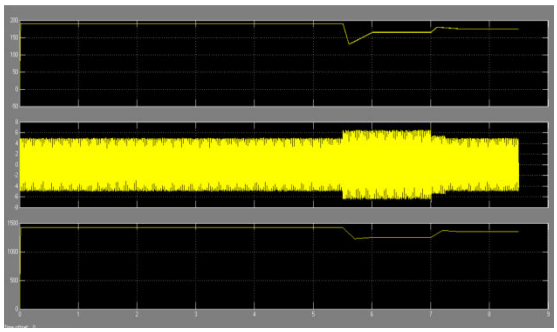

Fig.11. Variation of the motor speed, current and phase voltage at step change in the reference speed.

CONCLUSION

The main control objective is to correct the input PF with different operating conditions of the induction motor drive system. Input PFC is achieved by forcing the actual currents of the chopper to track their reference currents that are in phase with the input voltages using HBCC technique. The proposed control strategy uses only two PWM signals for driving the active switches of the AC chopper. The proposed system is simple, reliable and low cost as it has only four IGBT switches. Operation principle and mathematical analysis of the proposed system are introduced. The system was simulated using MATLAB/SIMULINK and a laboratory system was implemented. The effectiveness of the proposed control strategy has been tested at starting, reference speed change and load torque variation. The obtained results from the experimental and computer simulation works verify the validity of the proposed control strategy during all testing conditions. Performance of the system without PFC is roughly compared in accordance with concerning the proposed PFC technique during the three test cases. Comparative results illustrate that the system with the proposed PFC technique has a corrected PF and hence a better performance.

REFERANCES

[1] T. Mishima, Y. Nakagawa, M. Nakaoka, “A bridgeless BHB ZVSPWM AC–AC converter for high-frequency

induction heating applications," IEEE Trans. Ind. Appl., vol. 51, no. 4, pp 3304–3315, July/Aug. 2015, 10.1109/TIA.2015.2409177

[2] S. Mahendran, I. Gnanambal, and A. Maheswari, "FPGA-based genetic algorithm implementation for AC chopper fed induction motor," International Journal of Electronics, vol. 103, no. 12, pp. 2029-2041, Apr. 2016, 10.1080/00207217.2016.1175034

[3] F. L. Luo, H. Ye, and M. H. Rashid, (2005). Digital power electronics and applications. Elsevier.

[4] L. Rajaji, C. Kumar, and M. Vasudevan, "Fuzzy and ANFIS Based Soft Starter Fed Induction Motor Drive for High-Performance Applications," ARPN Journal of Engineering and Applied Sciences, vol. 3, no. 4, pp. 12–24, August 2008.

[5] A. Gastli, and M. M. Ahmed, "ANN-based soft starting of voltagecontrolled-fed IM drive system," IEEE Trans. Enrg. Conv., vol. 20, no. 3, pp. 497-503, Sept. 2005, 10.1109/TEC.2004.841522

[6] M. Muchlas, and H. Soetedjo, "Use of the maximum torque sensor to reduce the starting current in the induction motor," Sensors & Transducers, vol. 114, no. 3, pp. 161-169, Mar. 2010,

[7] G. Zenginobuz, I. Cadirci, and C. Barlak, "Performance optimization of induction motors during voltage-controlled soft starting," IEEE Trans. Energy Conversion, vol. 19, no. 2, pp. 278–288, Nov. 2004, 10.1109/TEC.2003.822292.

[8] K. Sundareswaran, and P.S. Nayak, "Ant colony-based feedback controller design for soft-starter fed induction motor drive," Applied Soft Computing, vol. 12, no. 5, pp. 1566-1573, May 2012, 10.1016/j.asoc.2011.12.012

[9] K. Sundareswaran, N. Rajasekar, and V.T. Sreedevi, "Performance comparison of capacitor-run induction motors supplied from AC voltage regulator and SPWM AC chopper," IEEE Trans. Ind. Electron, vol. 53, no. 3, pp. 990-993, June 2006, 10.1109/TIE.2006.874256.

[10] S. Jothibasu, and M. K. Mishra, "An improved direct AC–AC converter for voltage sag mitigation," IEEE Trans. Ind. Electron., vol. 62, no. 1, pp. 21-29, Jan. 2015, 10.1109/TIE.2014.2334668.